

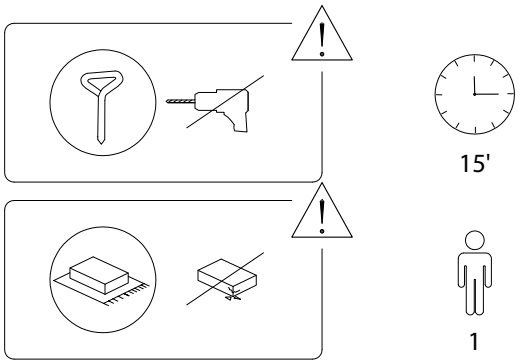

1/5

1082/VETTRE/041120/

A	B	C	D
x 1	x 1	x 1	x 1

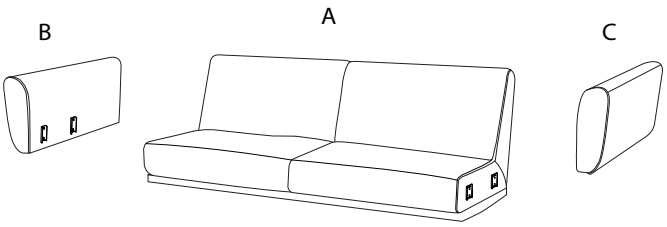

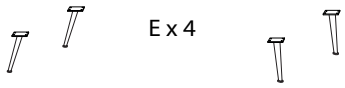

E	F	G	H
x 4	M4 x 25 x 16	x 16	x 1

2/5

1082/VETTRE/041120/

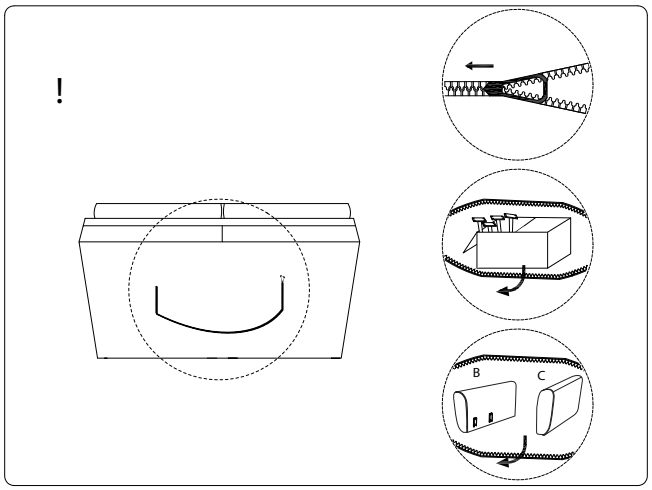

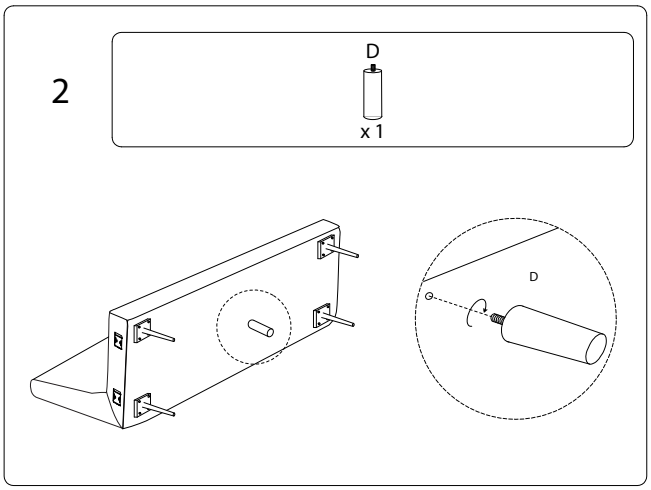

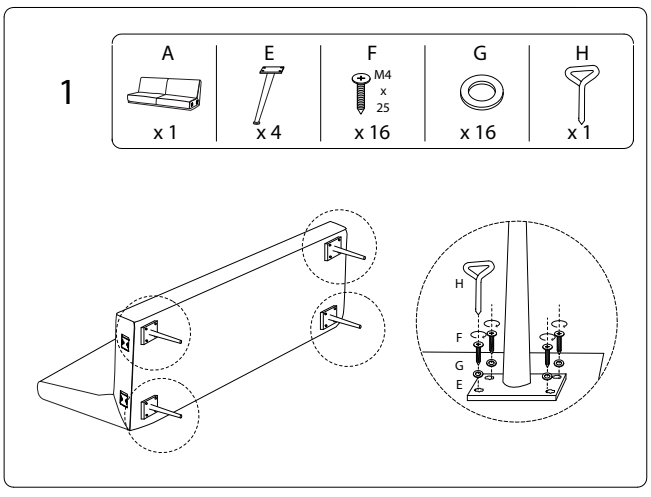

3/5

1082/VETTRE/041120/

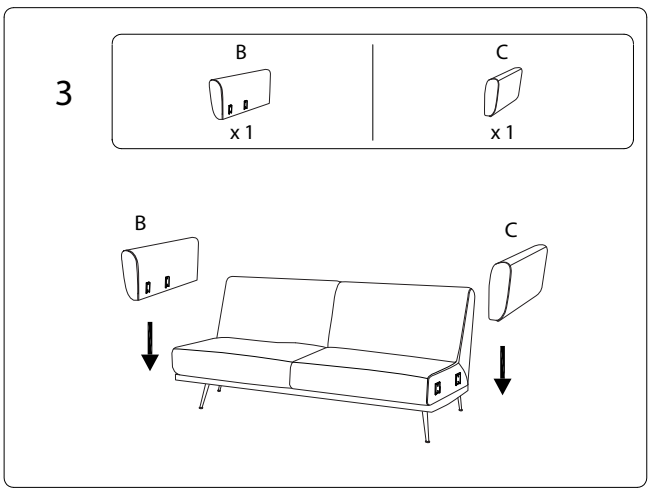

4/5

1082/VETTRE/041120/

!

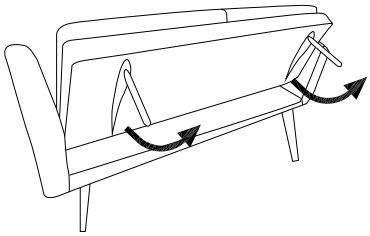

!

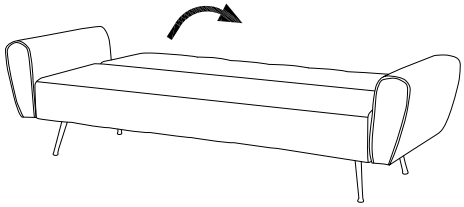

1082/VETTRE/041120/