MEDFORT

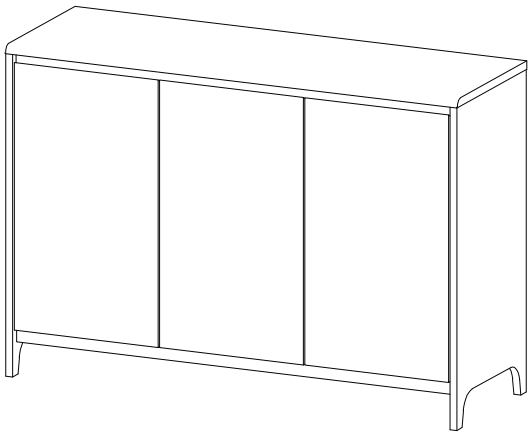

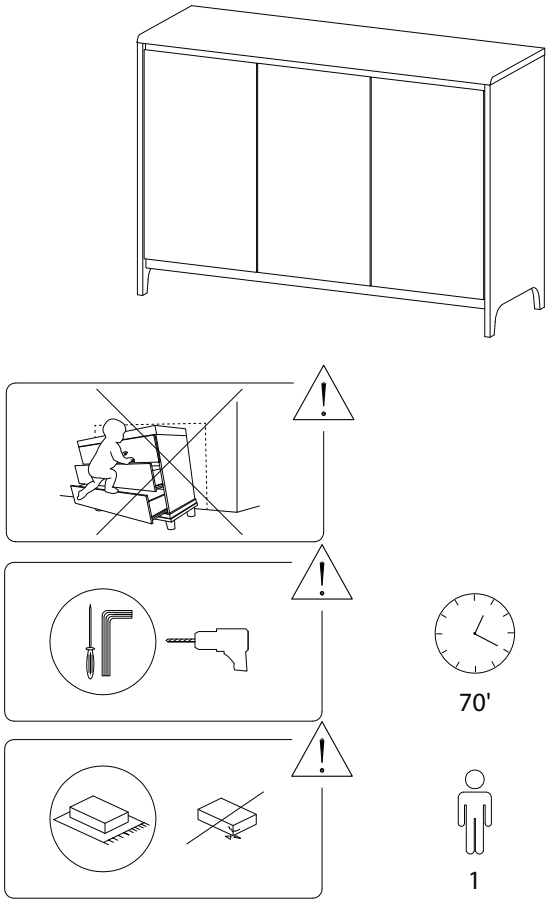
70'
1

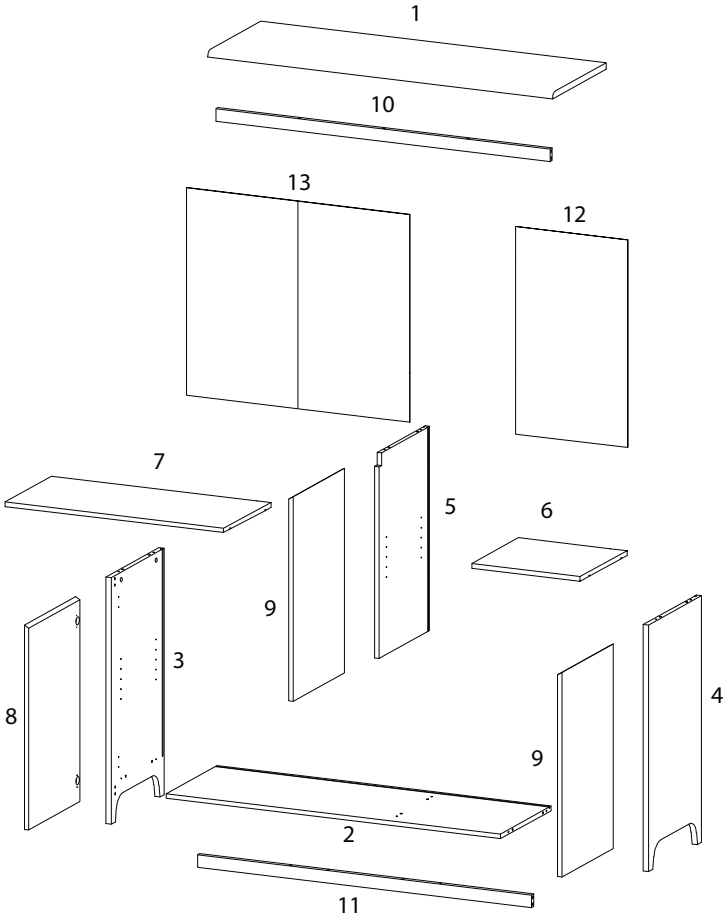
1
10
13
12
7
5
6
9
3
8
4
9
2
11

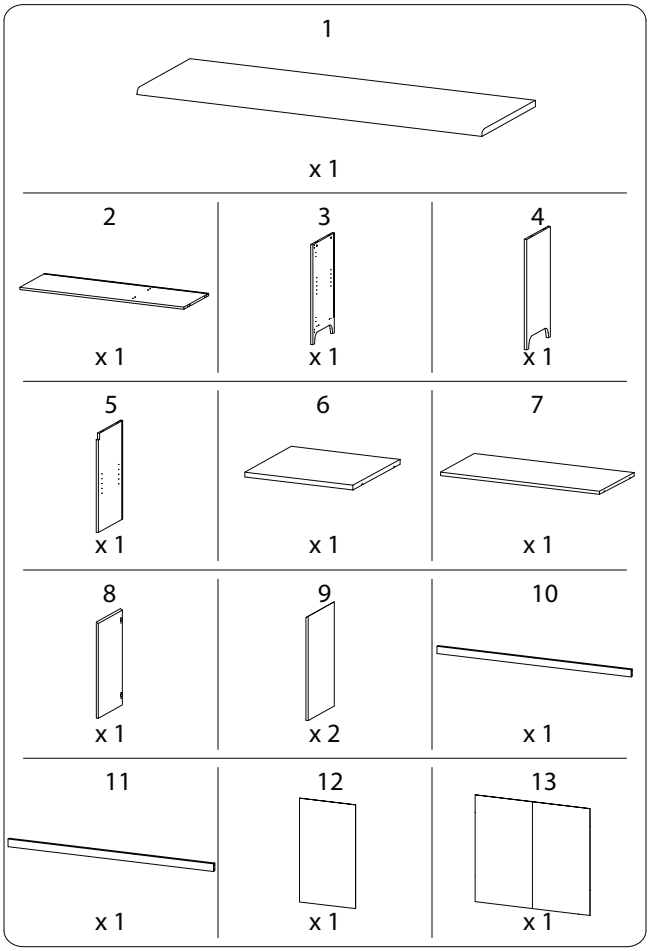
1
x 1
2
x 1
3
x 1
4
x 1
5
x 1
6
x 1
7
x 1
8
x 1
9
x 2
10
x 1
11
x 1
12
x 1
13
x 1

A	B	C
x 12	x 12	x 25
D	E	F
x 4	M7 x 50 x 2	x 1
G	H	I
M6 x 12.5 x 14	M4.5 x 12.5 x 24	x 2

J	K	L	M
x 8	M3.5 x 15.5 x 16	x 14	x 6
N	O	P	Q
x 1	x 2	M3.5 x 32 x 2	x 2

1

1	A
x 1	x 6

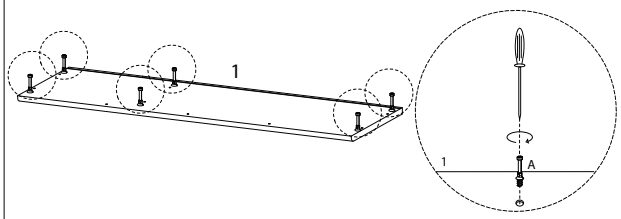

2

2	C
x 1	x 4

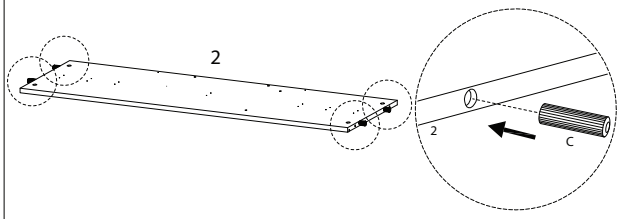

3

A
x 2

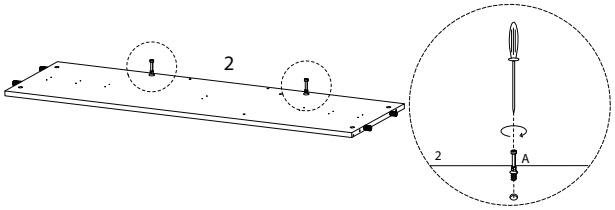

4

N	G
x 1	M6 x 12.5 x 14

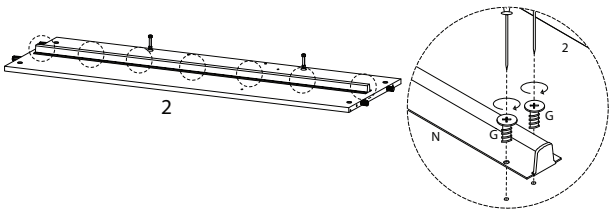

5

3	4	C
x 1	x 1	x 4

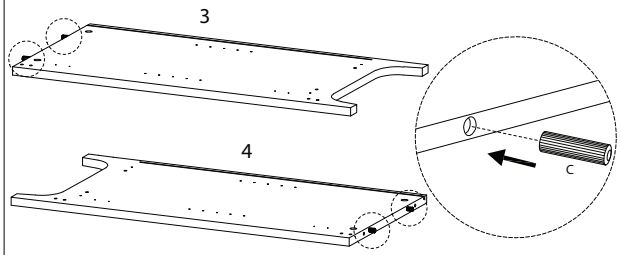

6

A
x 4

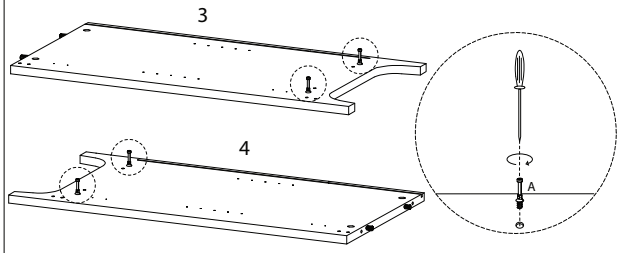

7

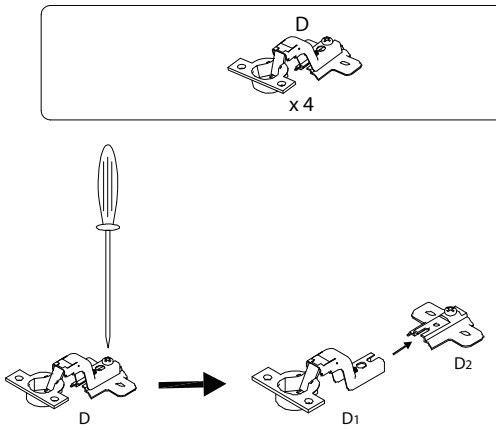

8

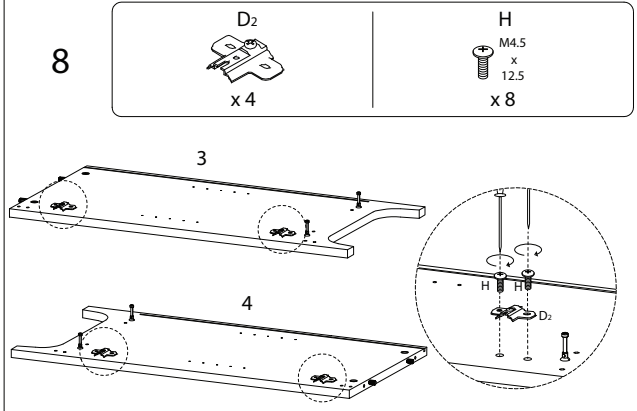

9

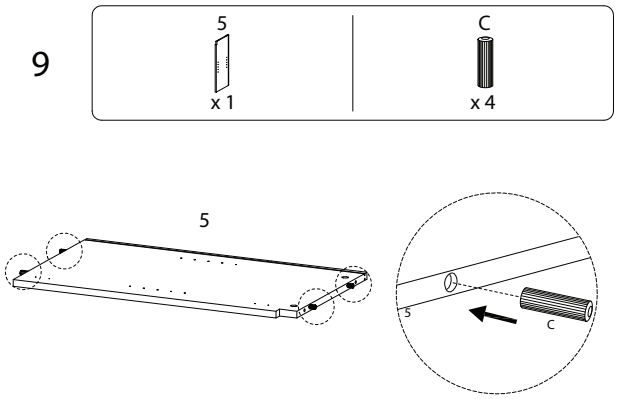

10

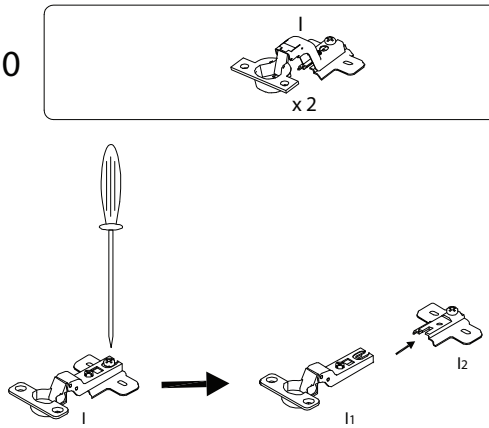

11

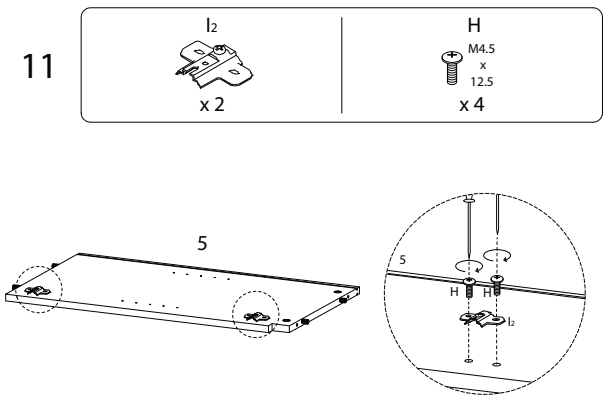

12

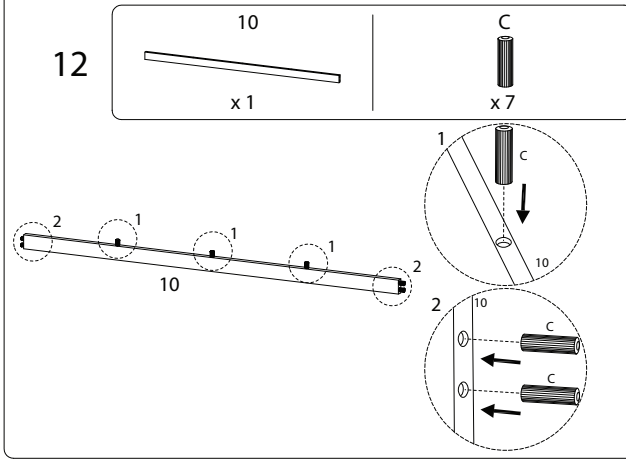

13

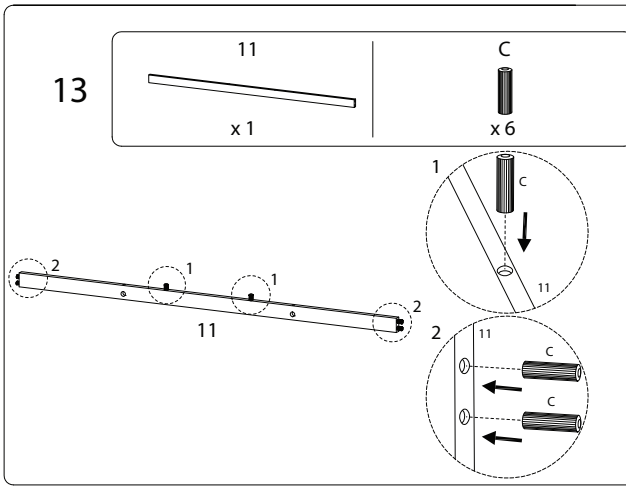

14

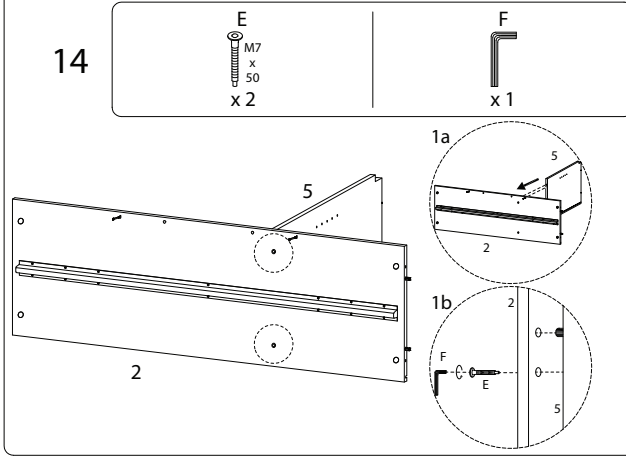

15

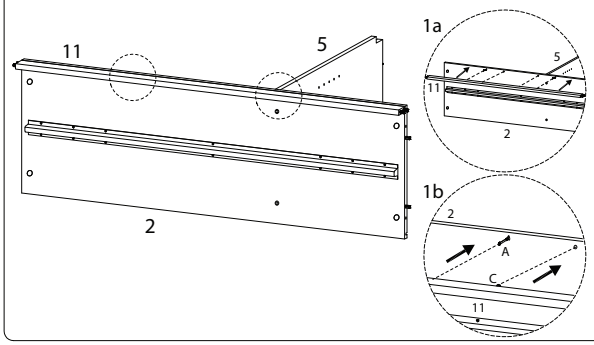

16

B

x 2

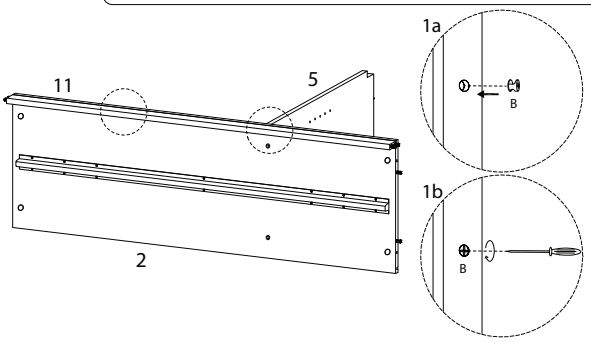

17

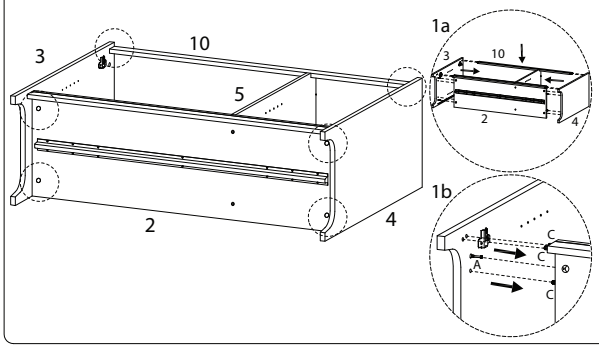

18

B

x 4

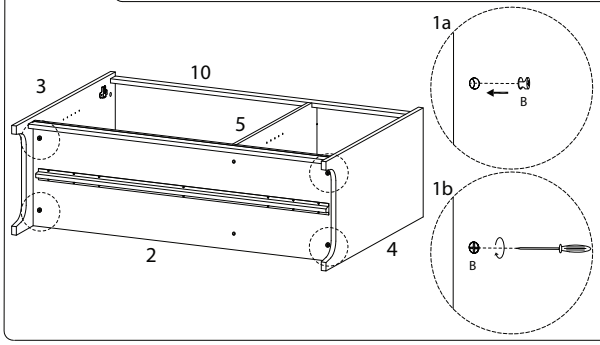

19

12

x 1

13

x 1

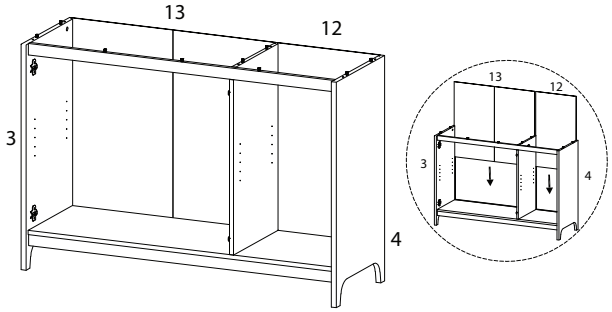

20

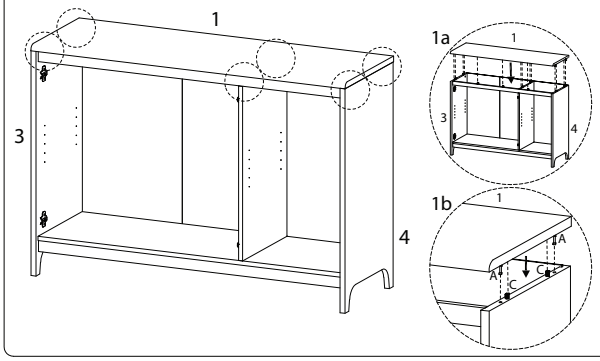

21

B

x 6

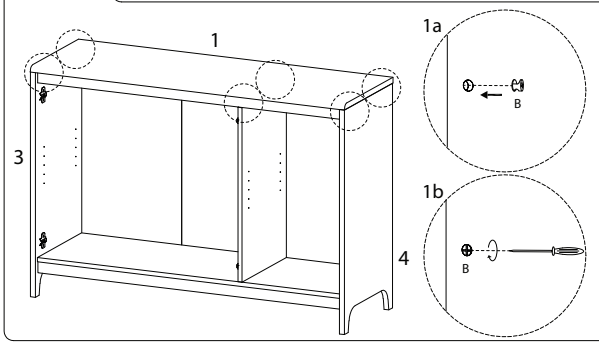

22

J

x 8

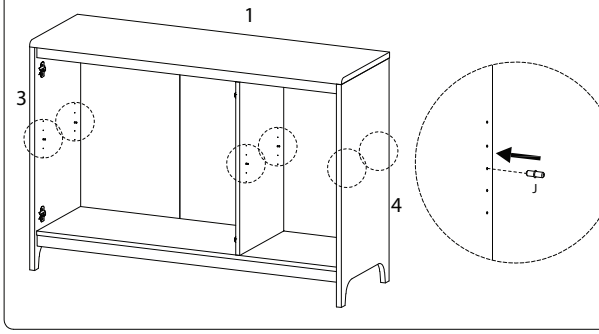

23

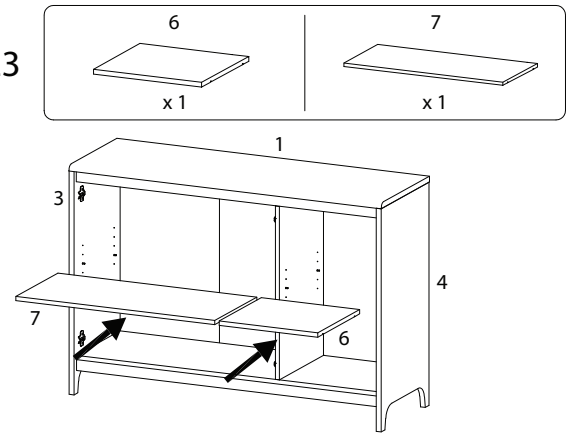

24

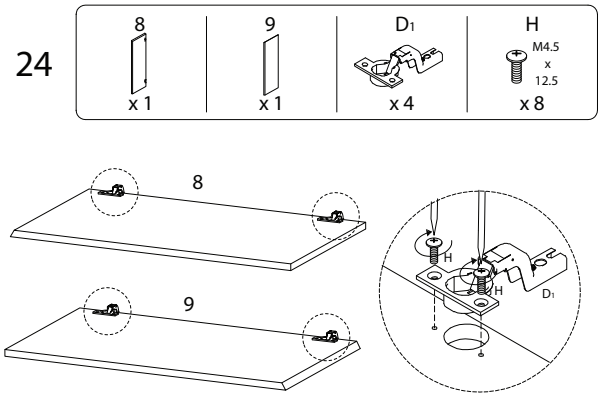

25

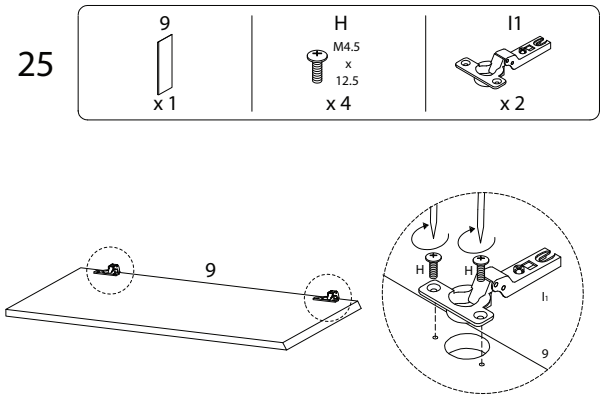

26

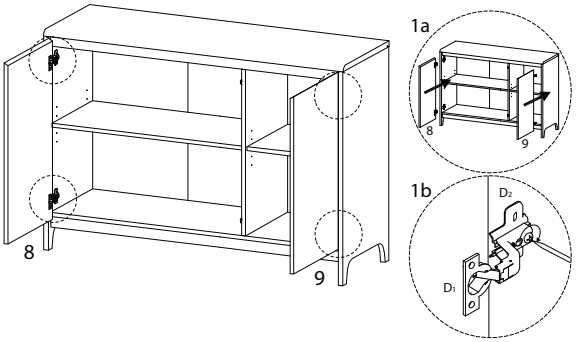

27

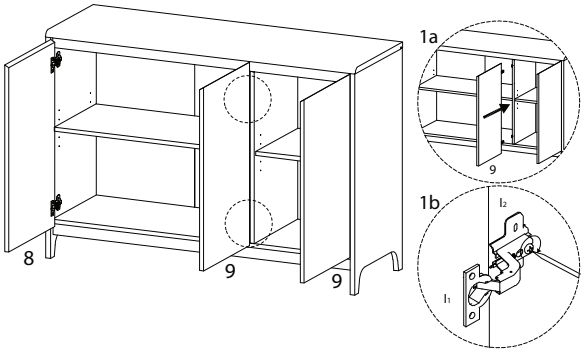

28

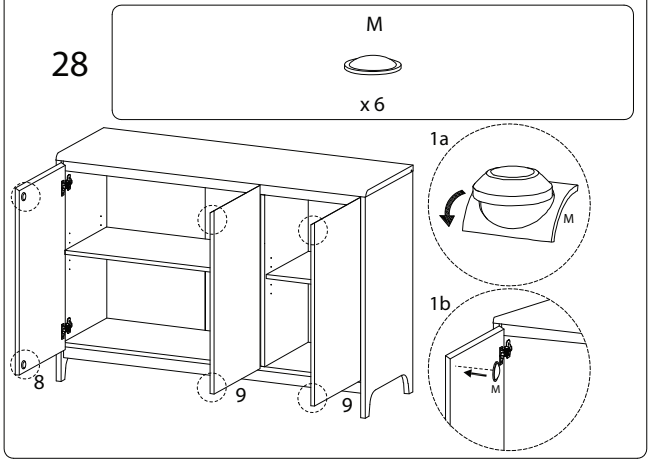

29

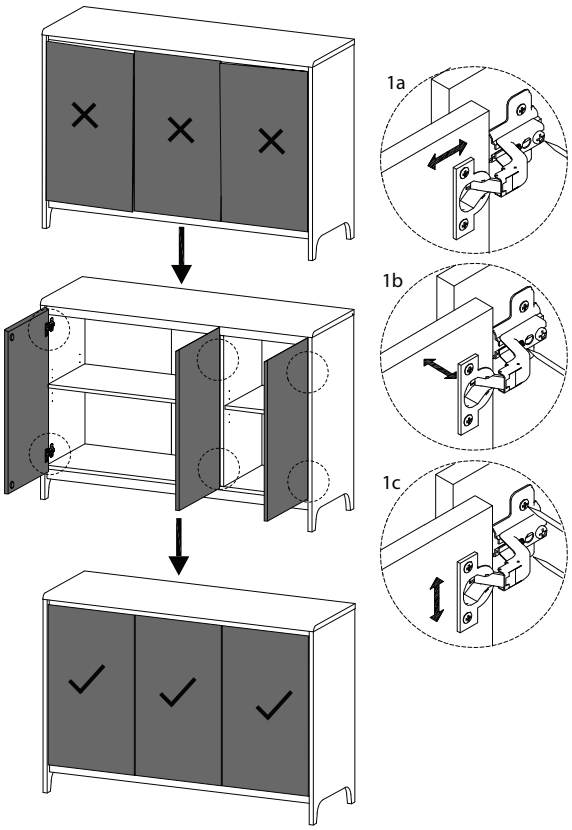

30

K	L
M3.5 x 15.5	
x 14	x 14

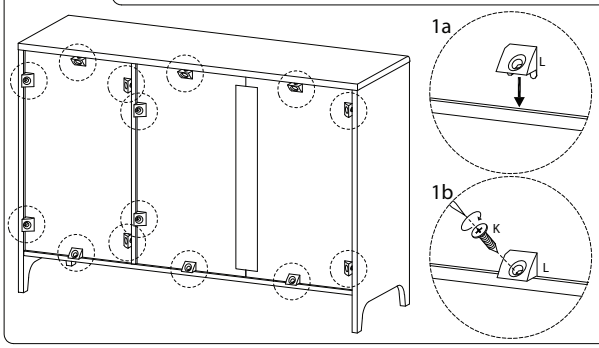

31

K	O
M3.5 x 15.5	
x 2	x 2

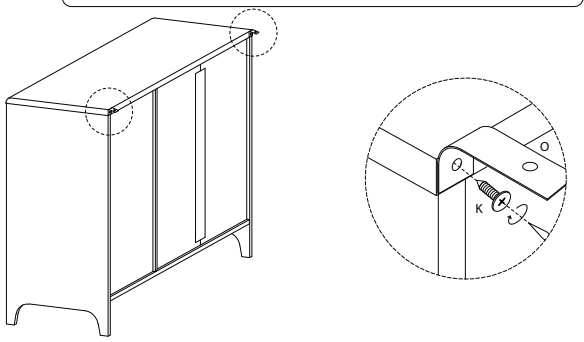

32

P	Q
M3.5 x 32	
x 2	x 2

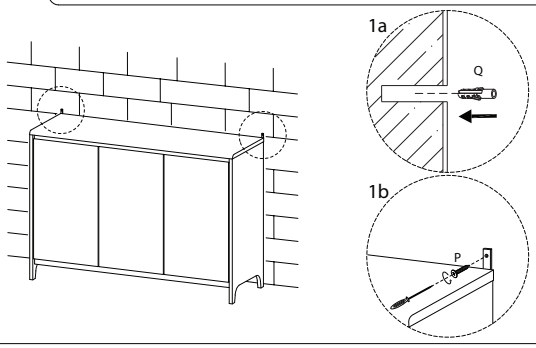
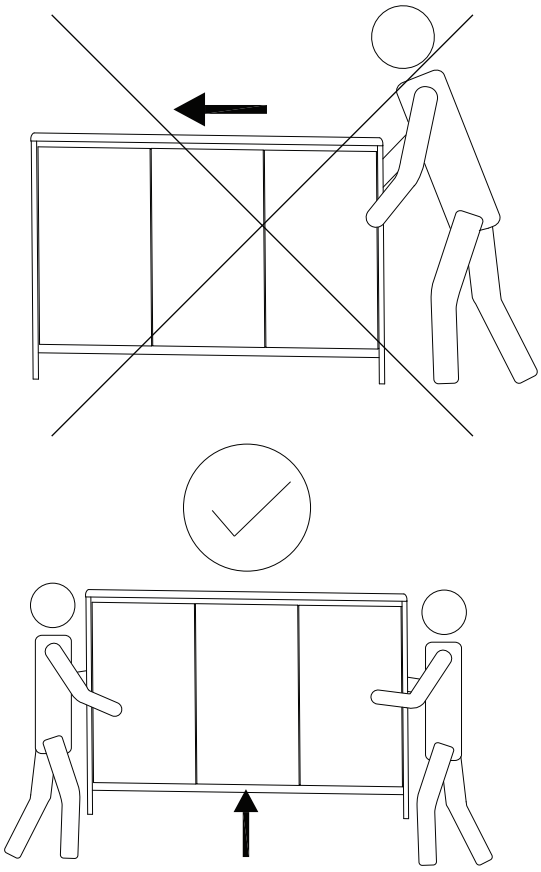
!