UNSTAD

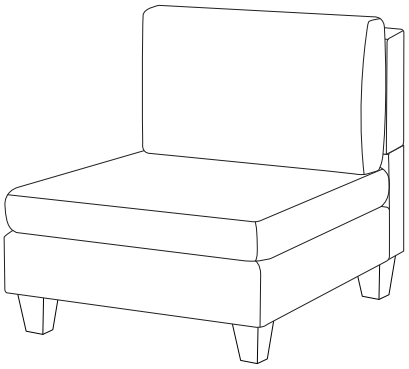

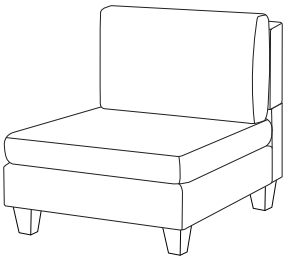

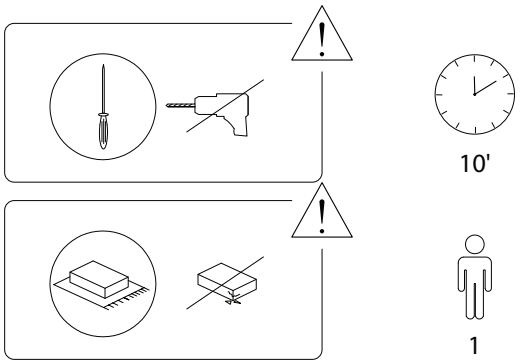

Beliani

Beliani
600/UNSTAD/240124/

A1	B	C
x 1	x 1	x 1

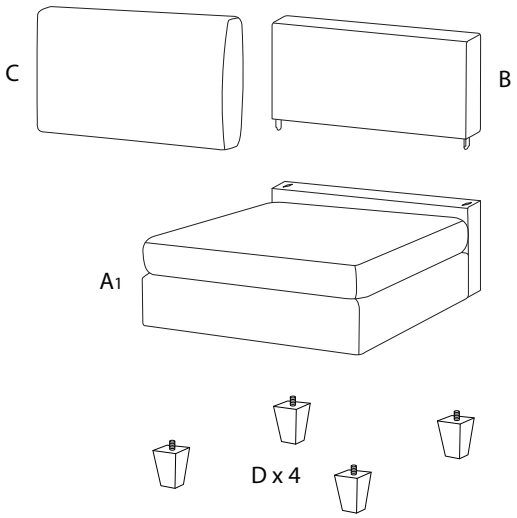

D	E	F	G
x 4	x 2	x 2	M5 x 20 x 8

Beliani
600/UNSTAD/240124/

!

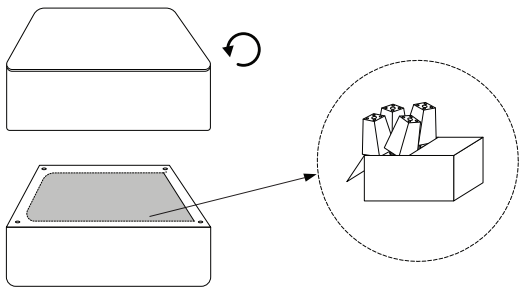

1

A1	D
x 1	x 4

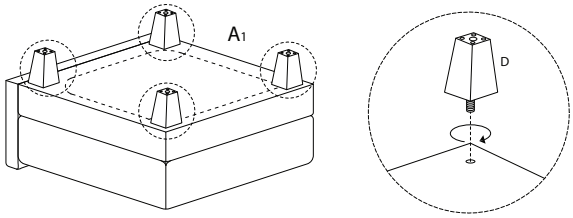

Beliani
600/UNSTAD/240124/

2

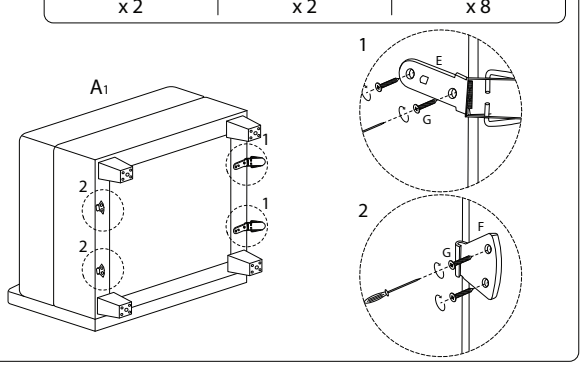

3

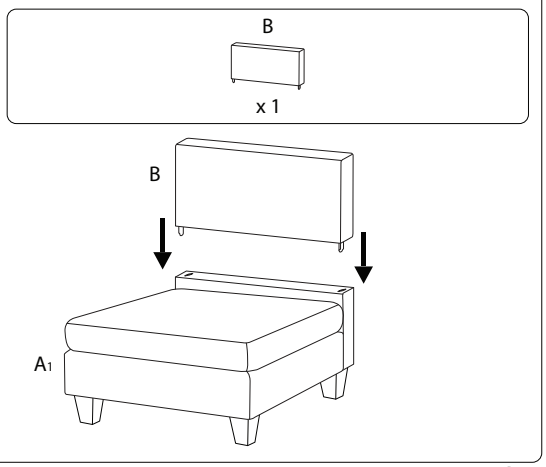

Beliani
600/UNSTAD/240124/

4

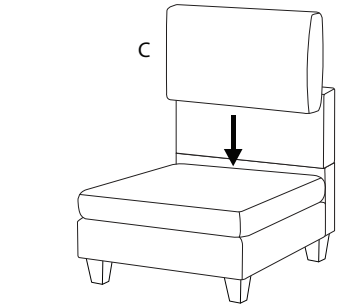

Beliani
600/UNSTAD/240124/

!

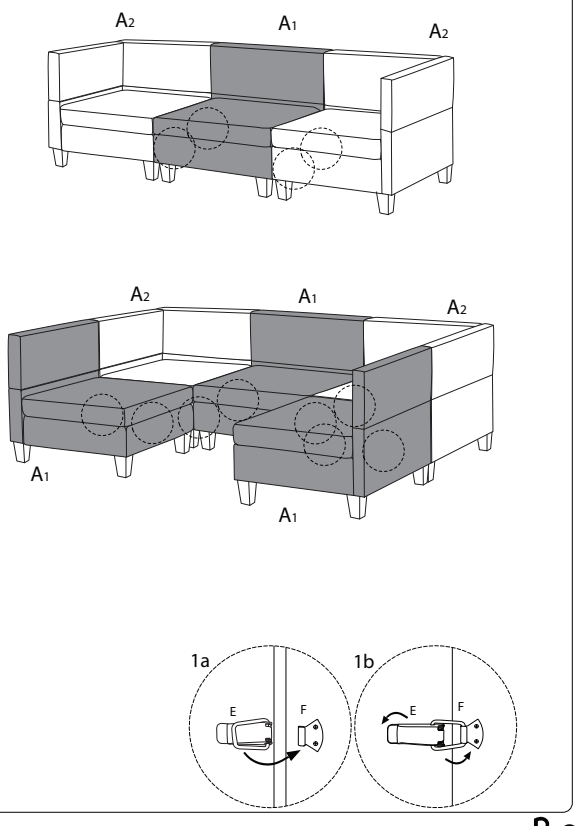

Beliani
600/UNSTAD/240124/