BERGEN

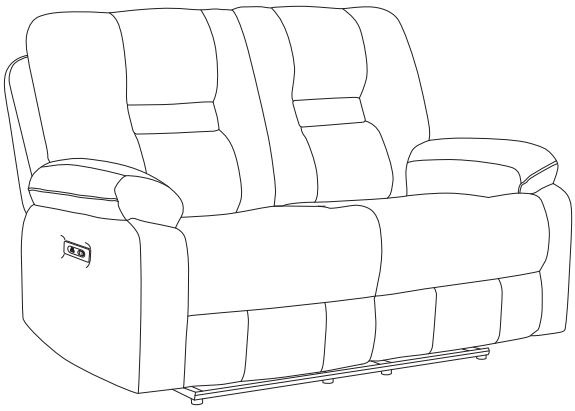

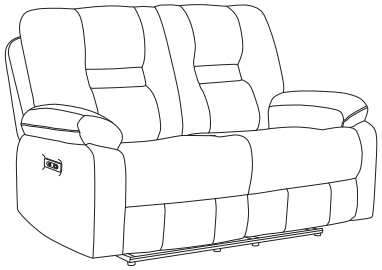

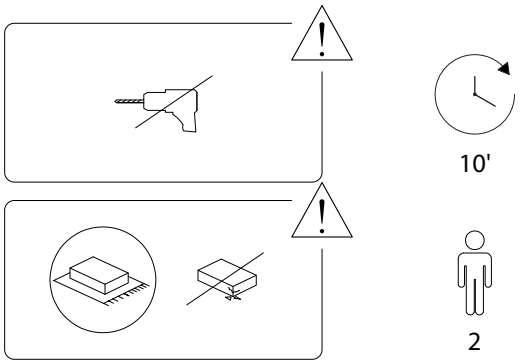

1/7

2/7

230/BERGEN/300426/

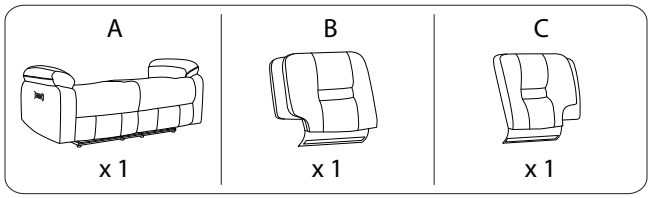

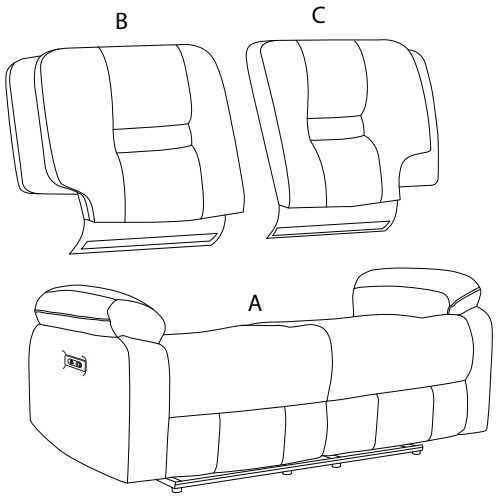

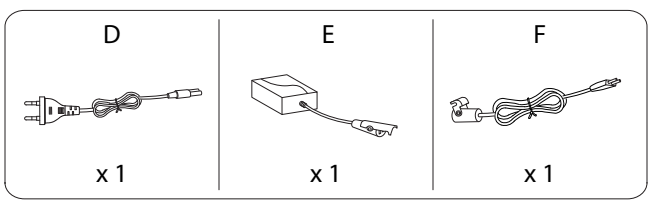

3/7

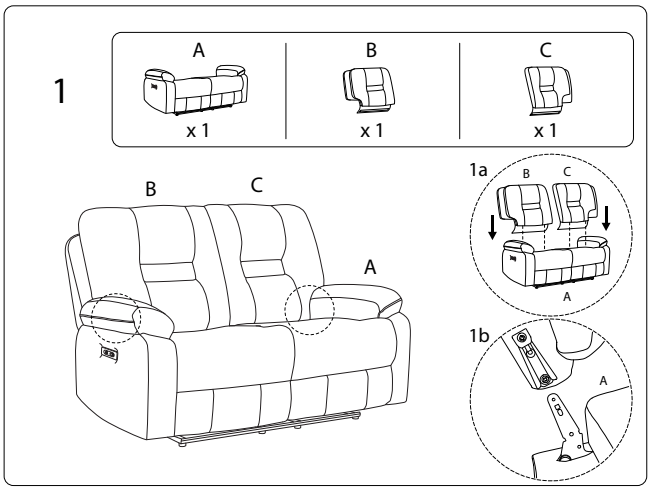

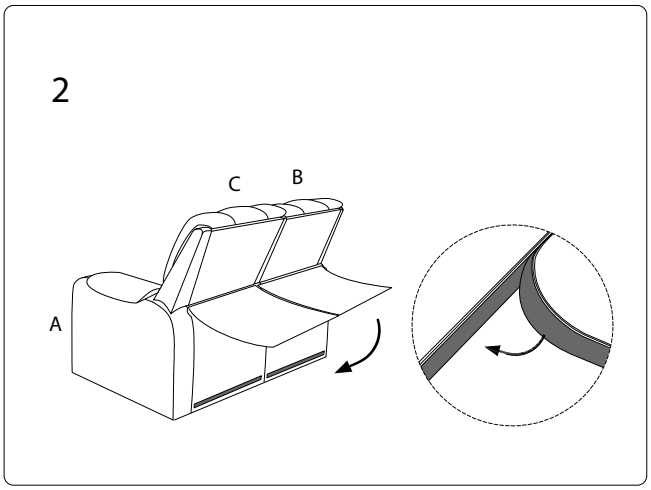

4/7

230/BERGEN/300426/

3

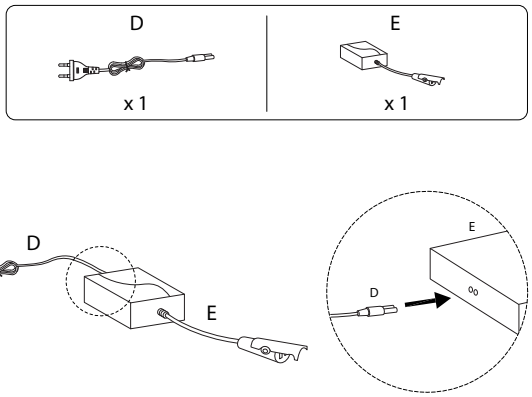

5

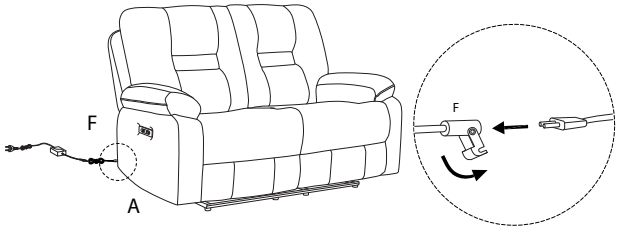

4

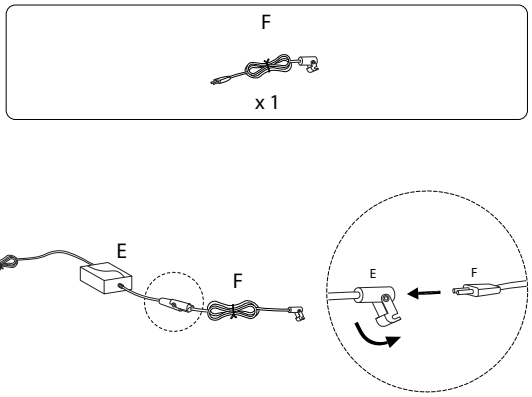

6

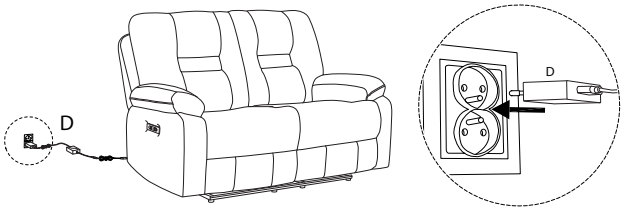

!

