HORMA

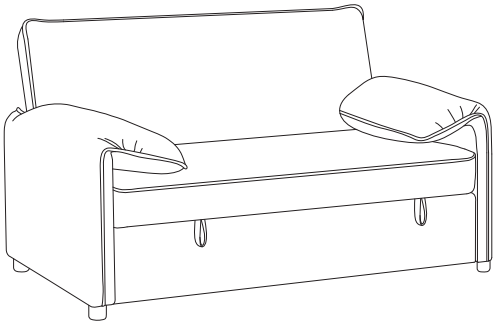

1/5

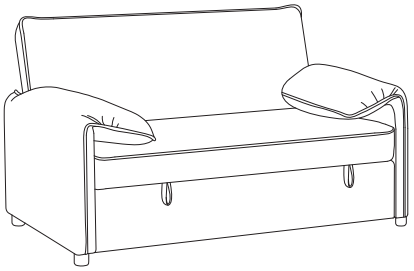

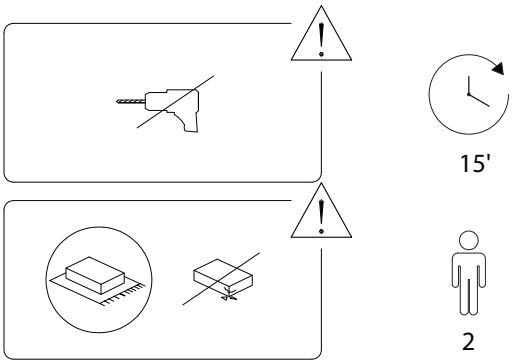

2/5

1082/HORMA/301225/

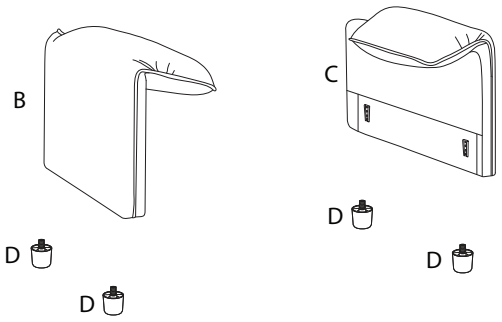

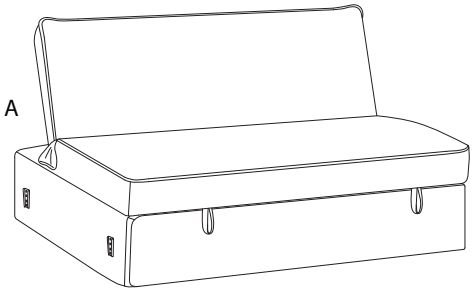

A	B	C	D
x 1	x 1	x 1	x 4

3/5

1082/HORMA/301225/

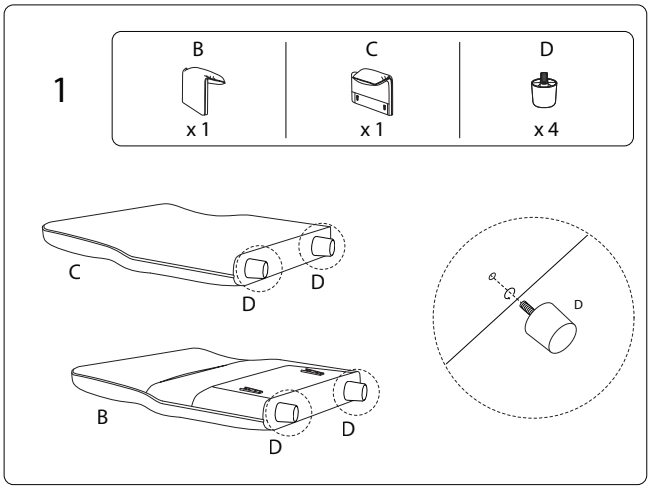

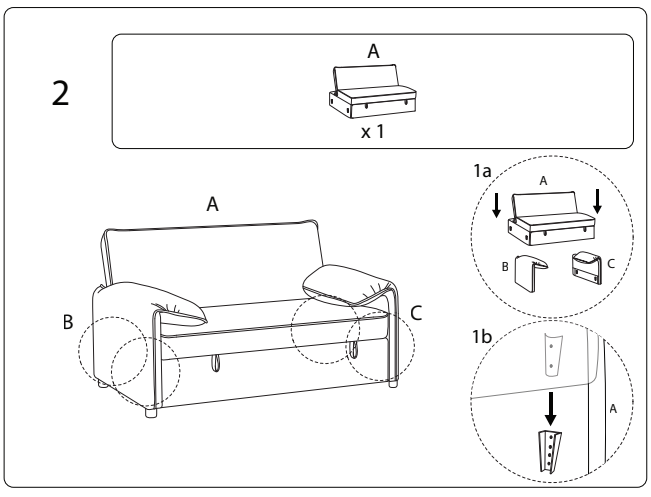

4/5

1082/HORMA/301225/

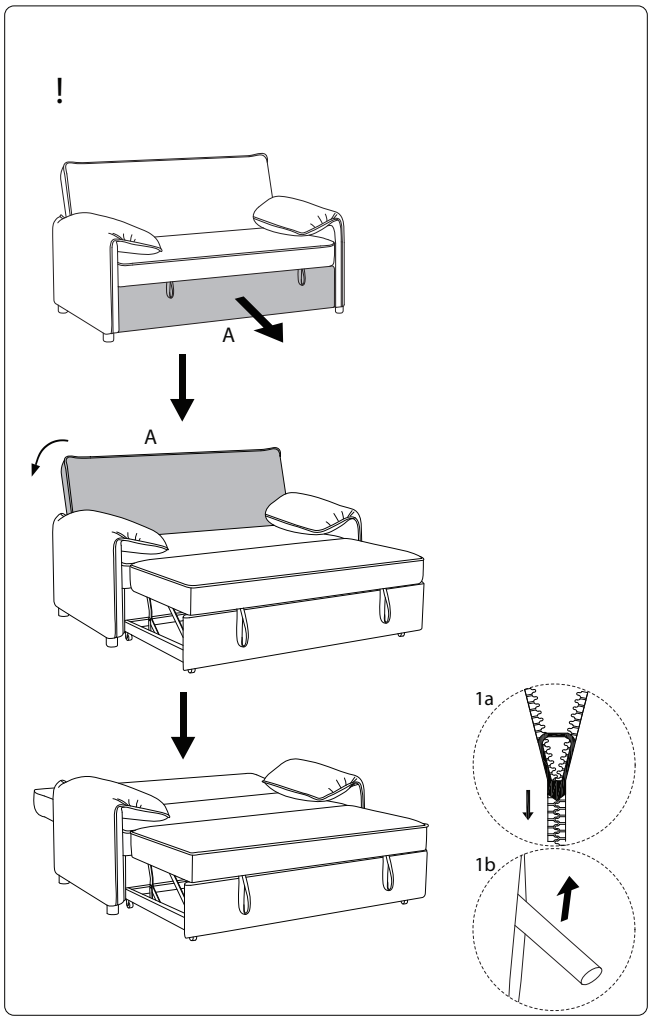

1082/HORMA/301225/