CHAVERNY

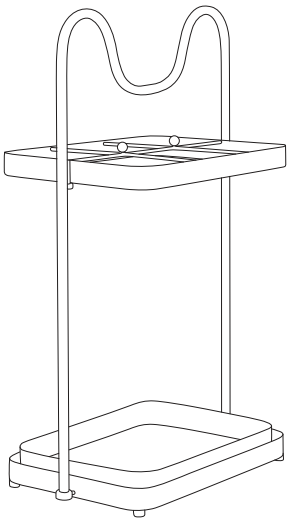

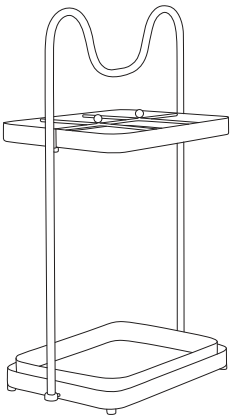

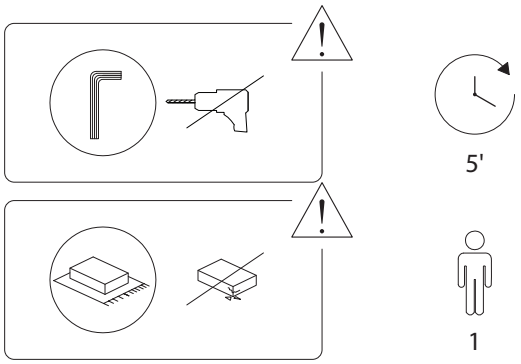

1/4

1	2	3	4
x 1	x 1	x 1	x 1

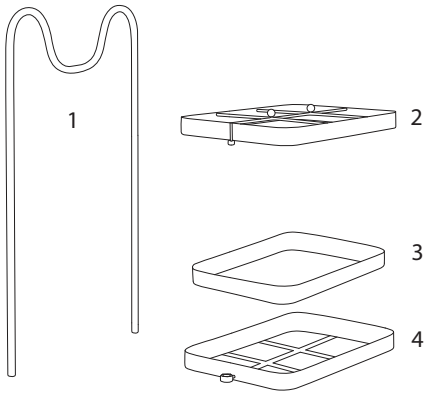

5	6
x 4	x 1

2/4

1

4	5
x 1	x 4

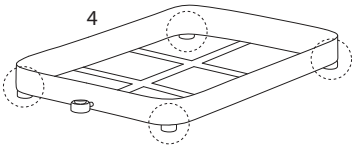

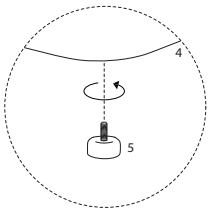

2

1	2	6
x 1	x 1	x 1

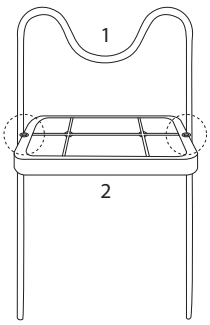

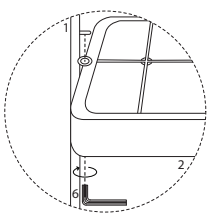

3/4

3

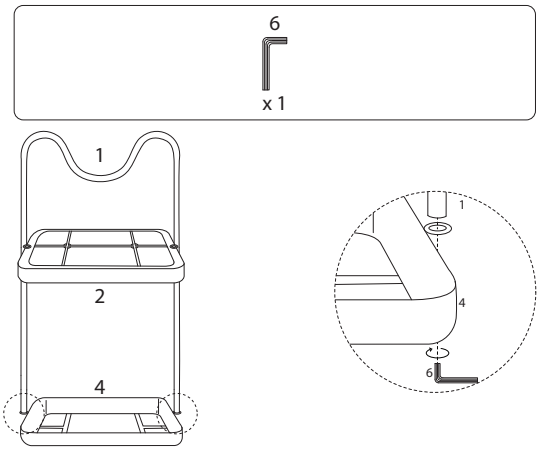

4

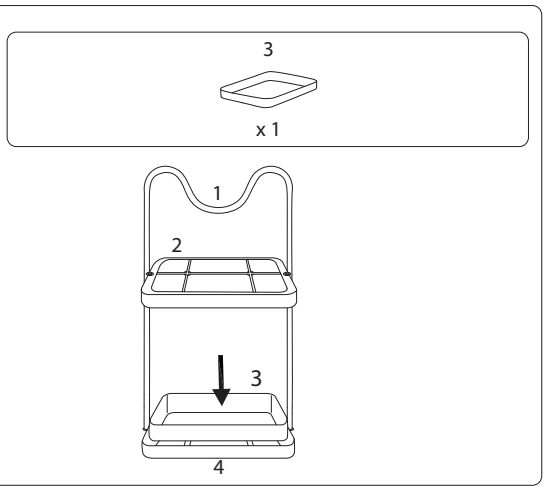

2301/CHAVERNY/131025/