
B x 2

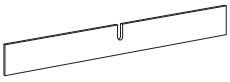
A x 10

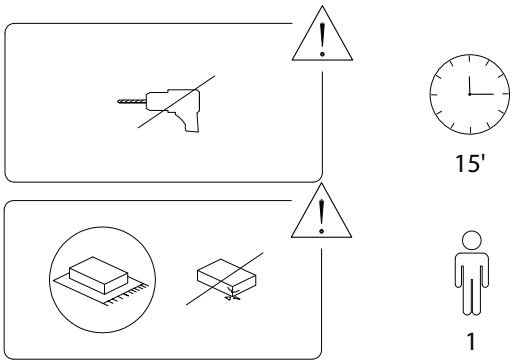
15'
1





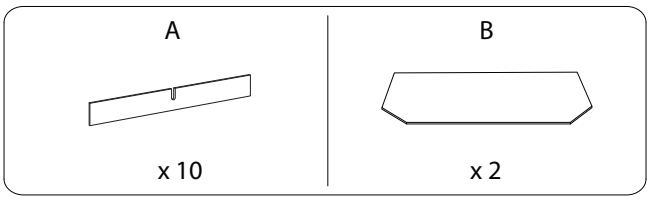
A
x 10
B
x 2





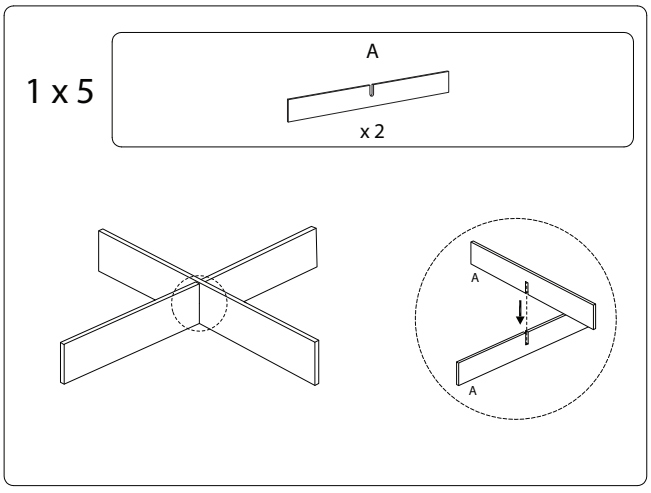
1 x 5
A
x 2
A
A

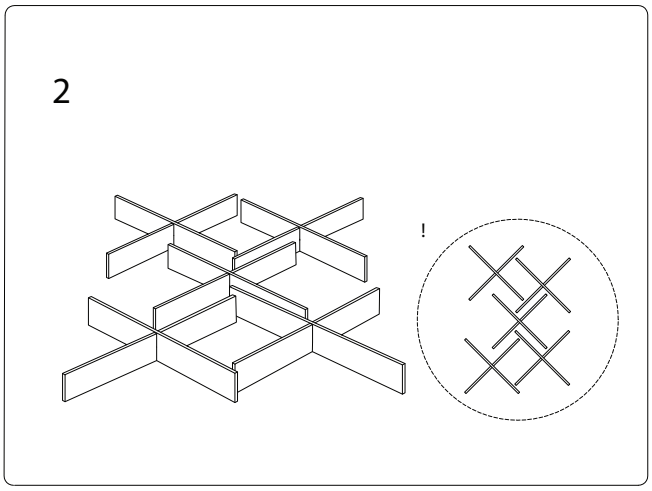
2
!





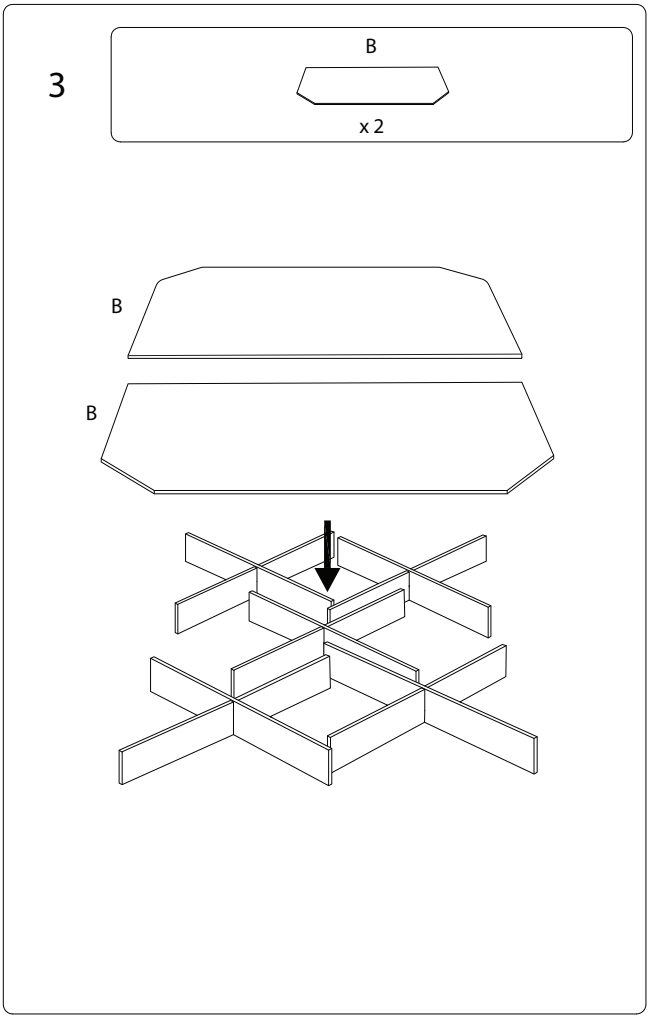
3
B
x 2
B
B