VERDAL

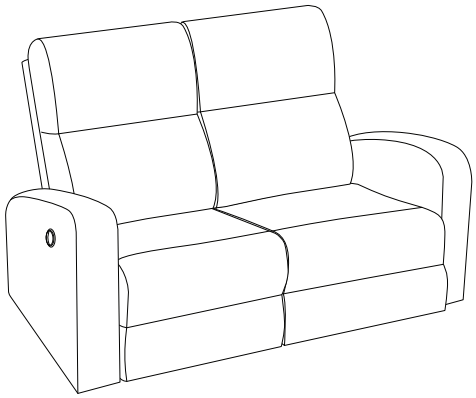

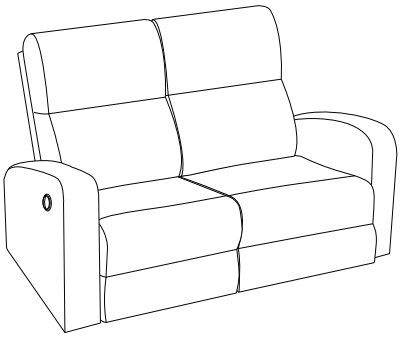

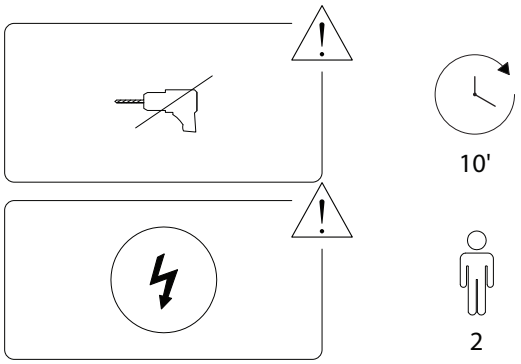
10'
2

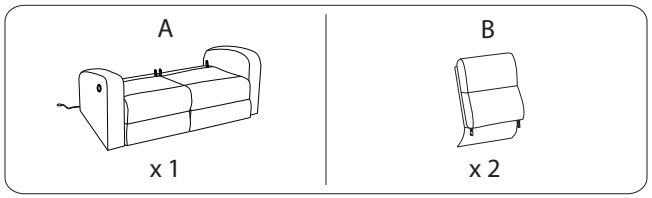
A
x 1
B
x 2

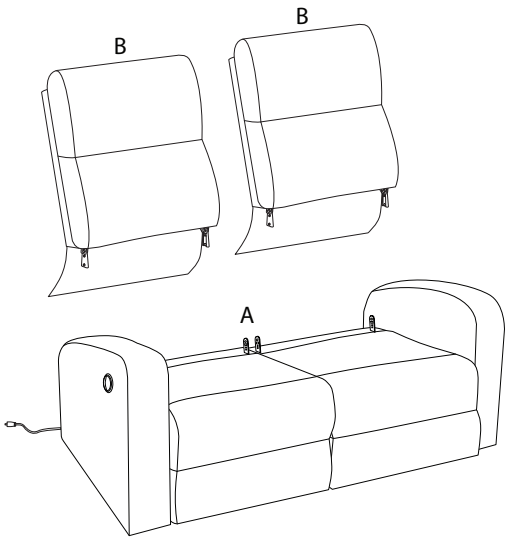
B
B
A

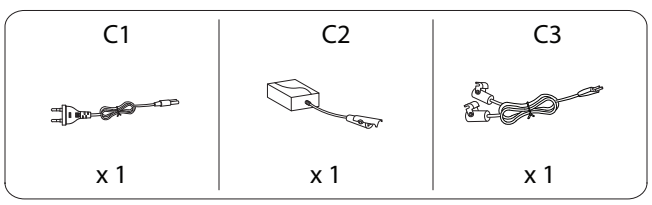
C1
x 1
C2
x 1
C3
x 1

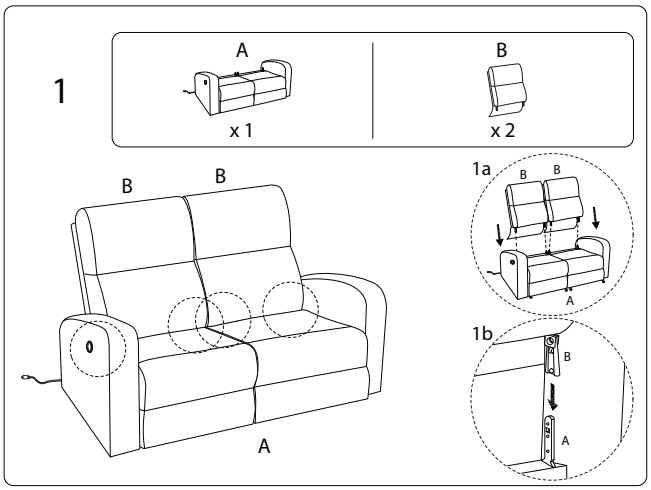
1
A
x 1
B
x 2
B
B
A
1a
B
B
A
1b
B
A

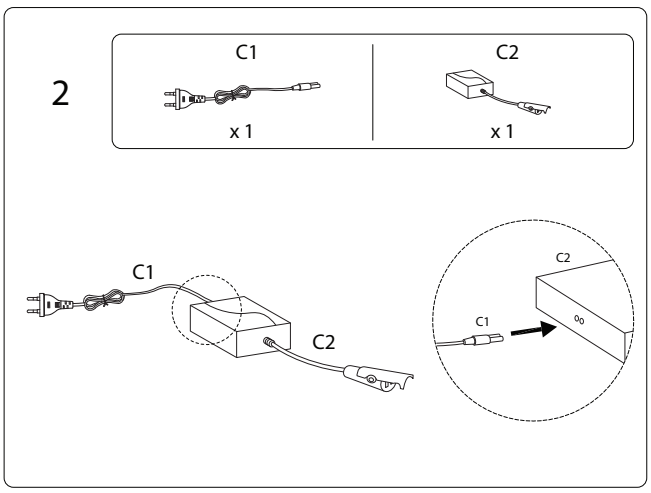
2
C1
x 1
C2
x 1
C1
C2
C2
C1

3

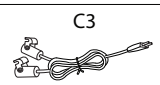

x 1

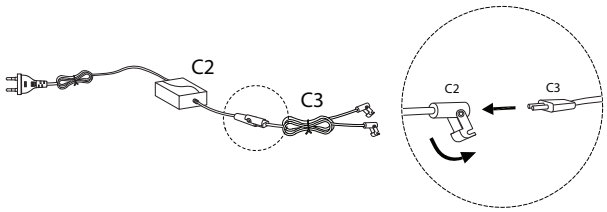

5

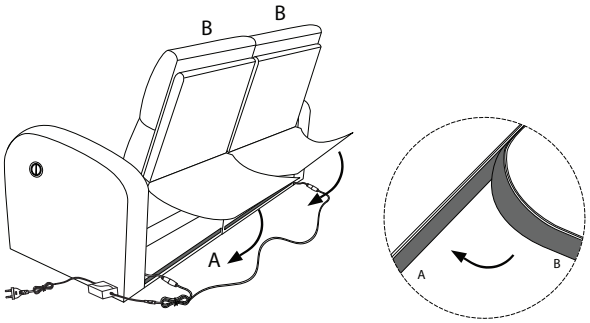

4

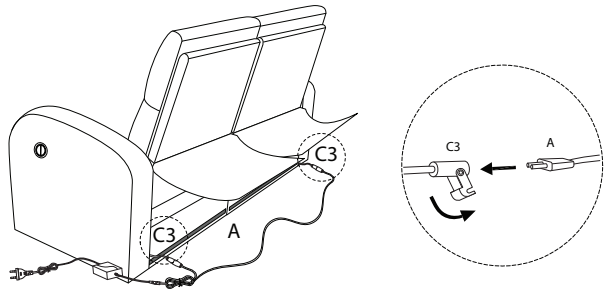

!

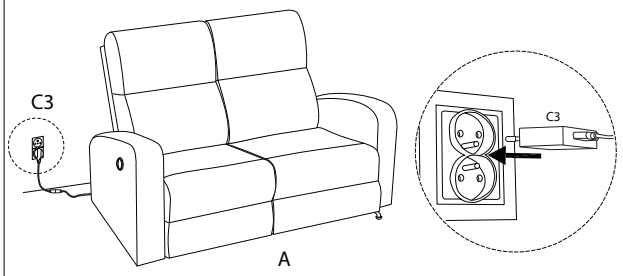

!

