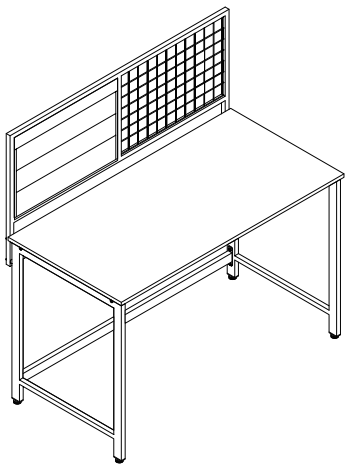

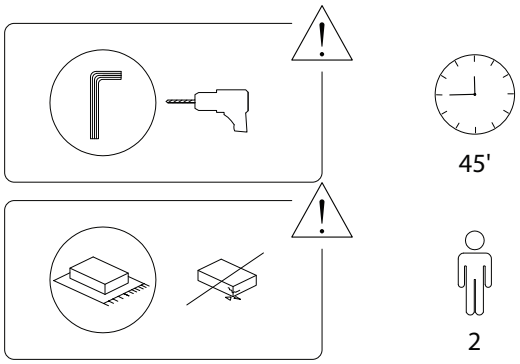

1/7

1518/VINCE/110522/

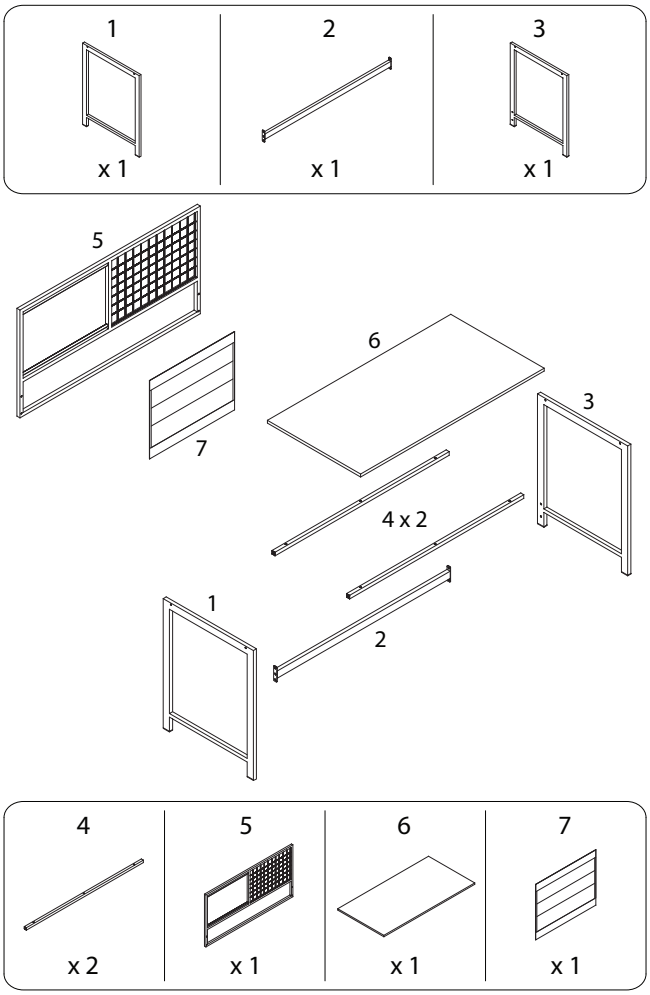

2/7

1518/VINCE/110522/

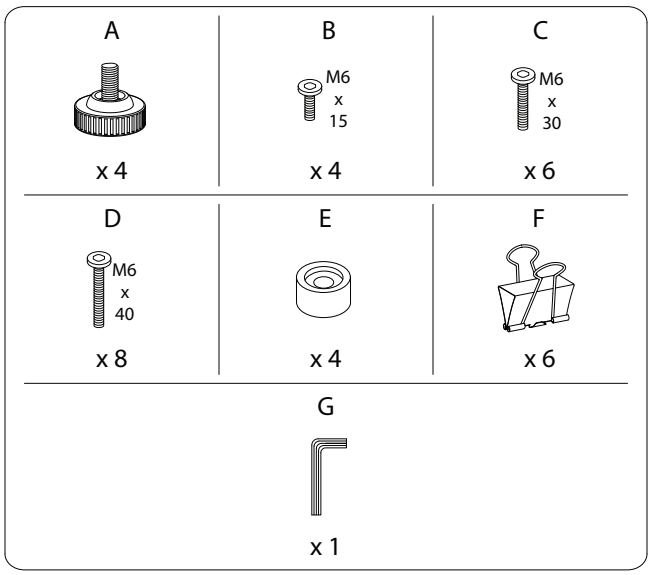

3/7

1518/VINCE/110522/

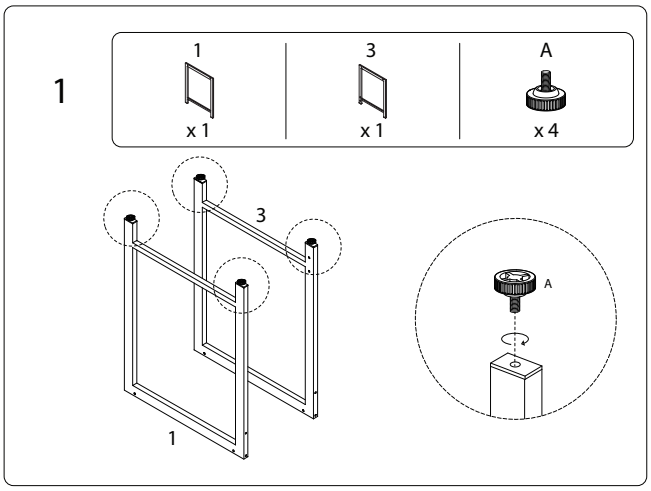

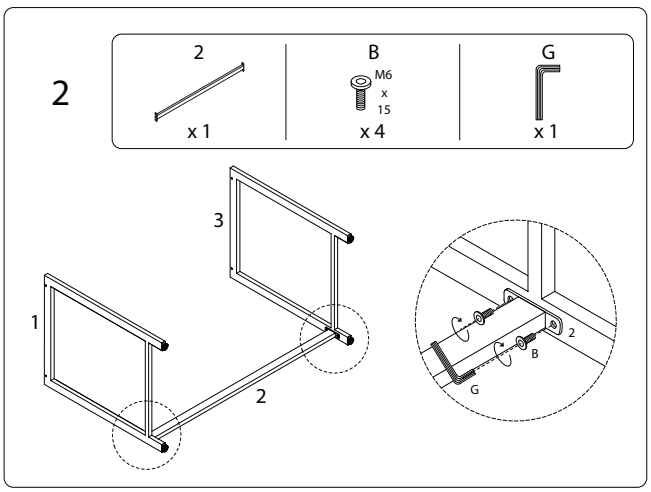

4/7

1518/VINCE/110522/

3

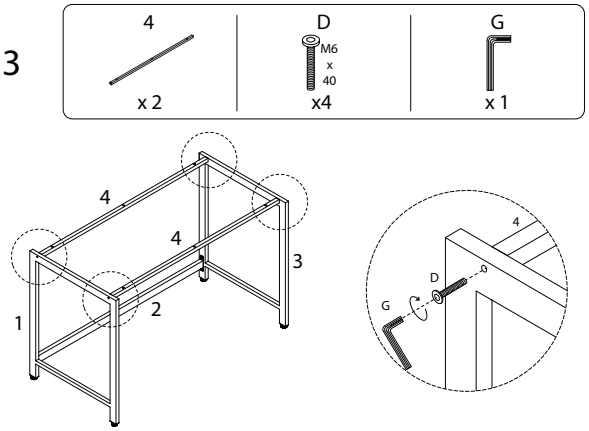
4
x 2
D
M6
x
40
x4
G
x 1
4
4
3
1
2
4
D
G

5

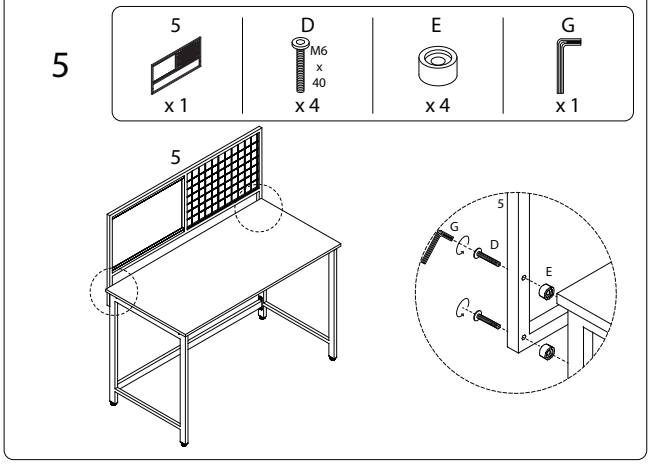
5
x 1
D
M6
x
40
x 4
E
x 4
G
x 1
5
5
G
D
E

4

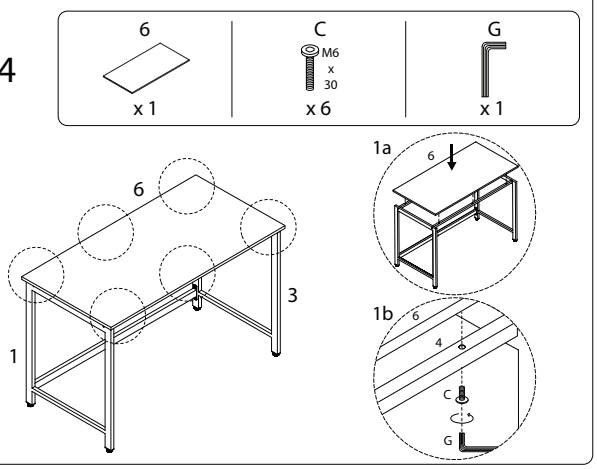
6
x 1
C
M6
x
30
x 6
G
x 1
6
3
1
1a
6
1b
6
4
C
G

6

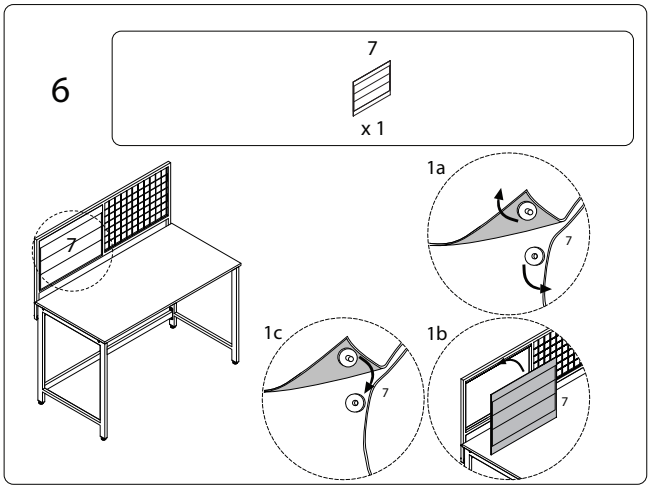
7
x 1
7
1a
7
1c
7
1b
7

7

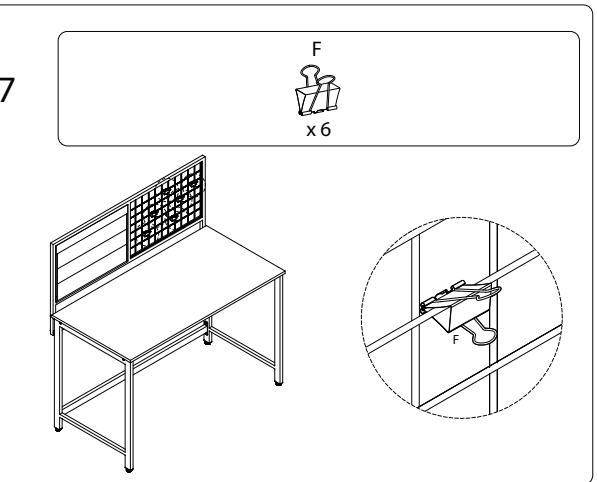
F
x 6
F