SERGUER

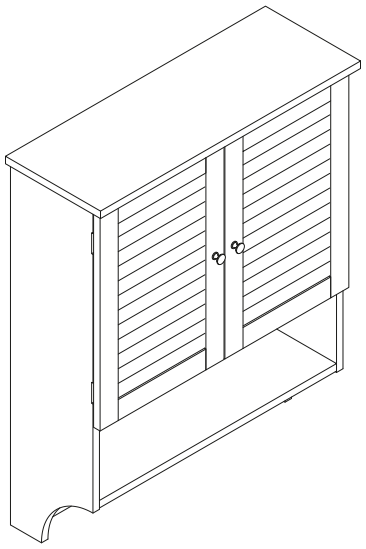

1/13

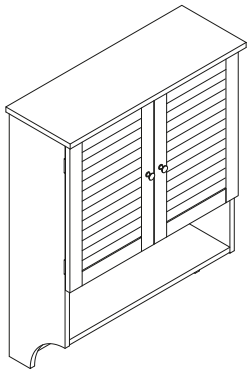

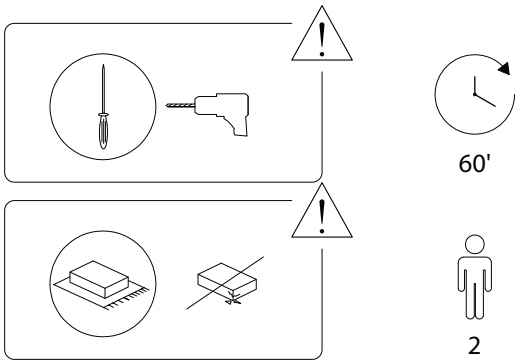

2/13

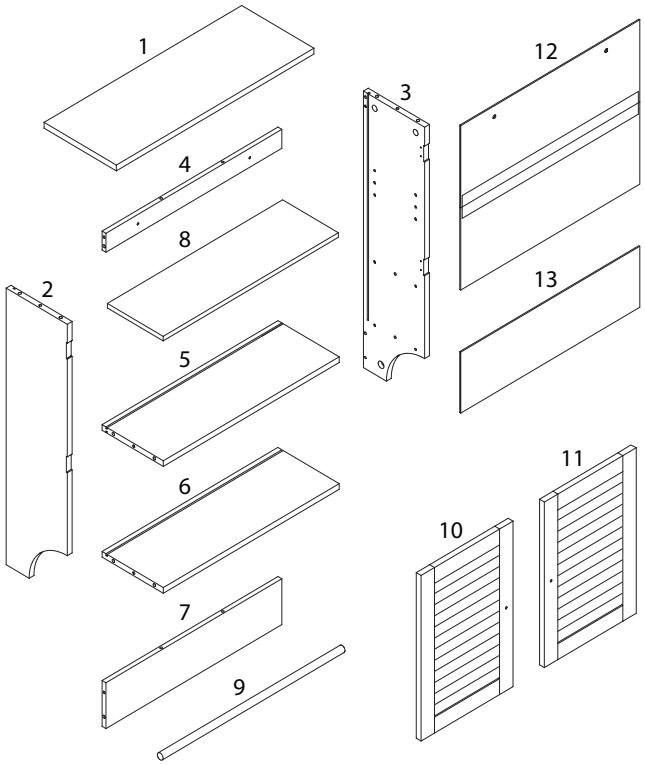

1	2	3	4
x 1	x 1	x 1	x 1

3/13

5	6	7
x 1	x 1	x 1
8	9	10
x 1	x 1	x 1
11	12	13
x 1	x 1	x 1
A	B	C
x 16	x 16	x 14
D	E	F
M4 x 45	M3 x 12	M3 x 14
x 2	x 18	x 10

4/13

G	H	I
 M4 x 18	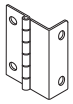	
x 2	x 4	x 2
J	**K**	**L**
	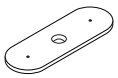	
x 1	x 2	x 8
M		**N**
		
x 2		x 4

1

2	3	A
x 1	x 1	x 12

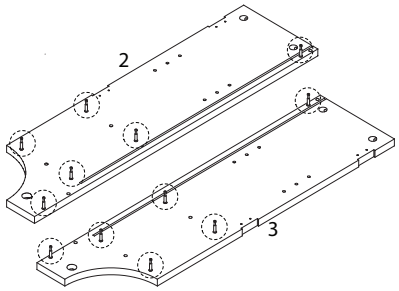

2

1	A	F	J
x 1	x 4	M3 x 14 x 2	x 2

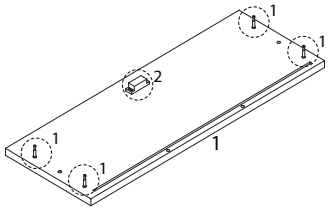

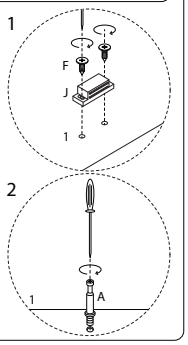

3

4	5	6	7	C
x 1	x 1	x 1	x 1	x 10

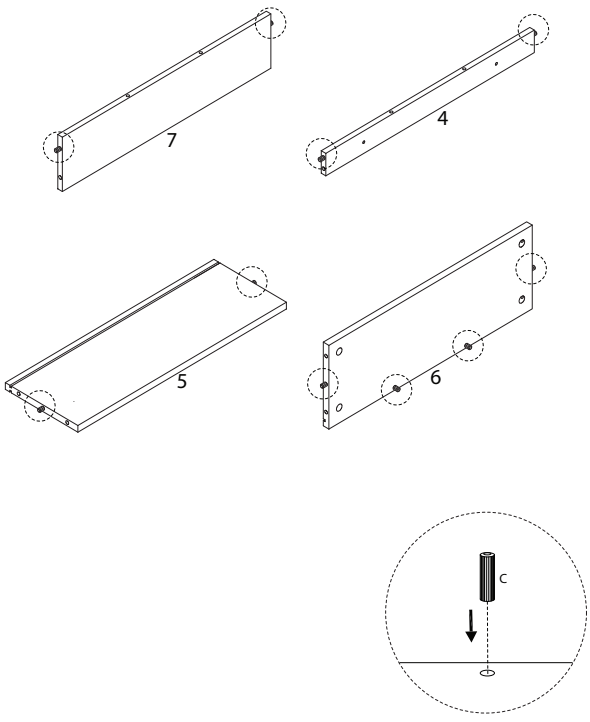

4

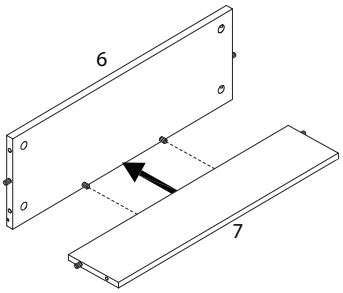

5

B
x 6

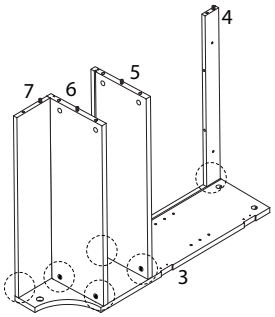

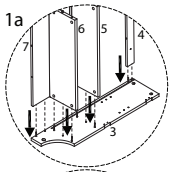

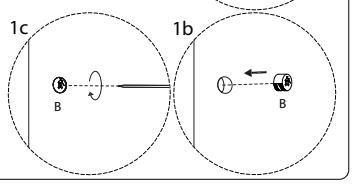

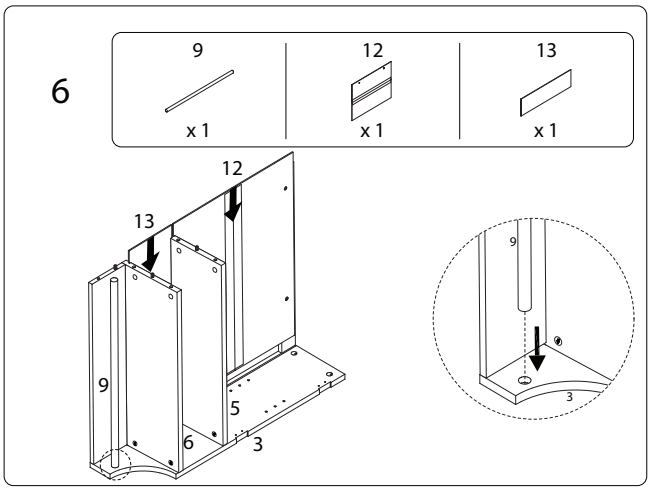
6
9
x 1
12
x 1
13
x 1
12
13
9
5
6
3
9
3

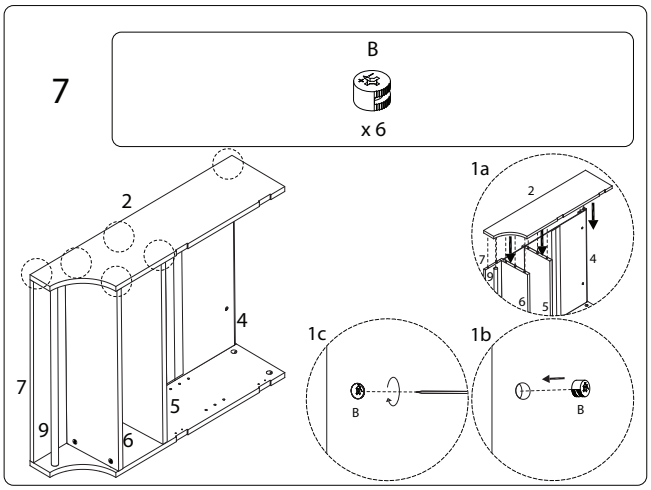
7
B
x 6
2
4
7
5
9
6
1a
2
7
9
4
6
5
1c
B
1b
B

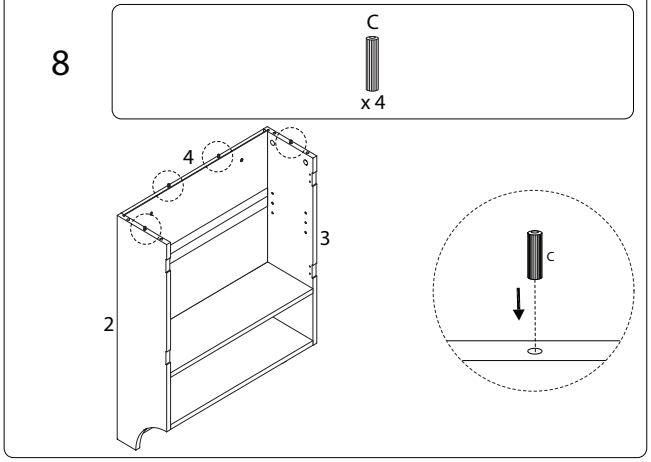
8
C
x 4
4
3
2
C

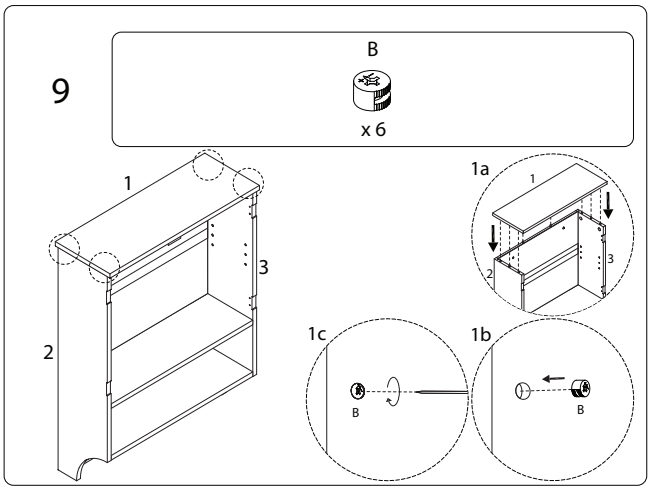
9
B
x 6
1
3
2
1a
1
2
3
1c
B
1b
B

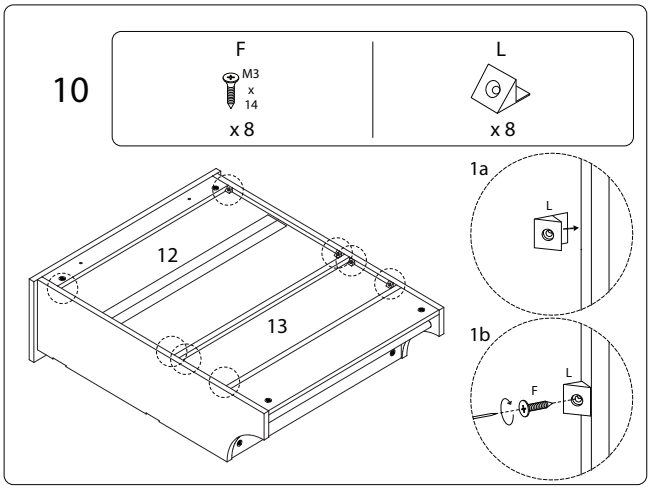
10
F
M3
x
14
x 8
L
x 8
12
13
1a
L
1b
F
L

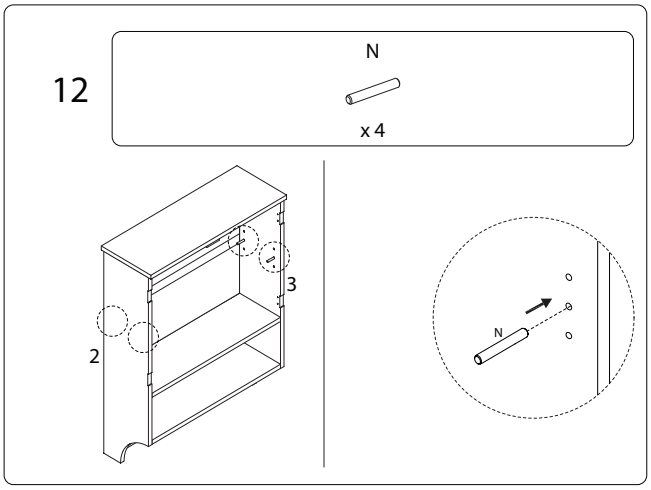
12
N
x 4
3
2
N

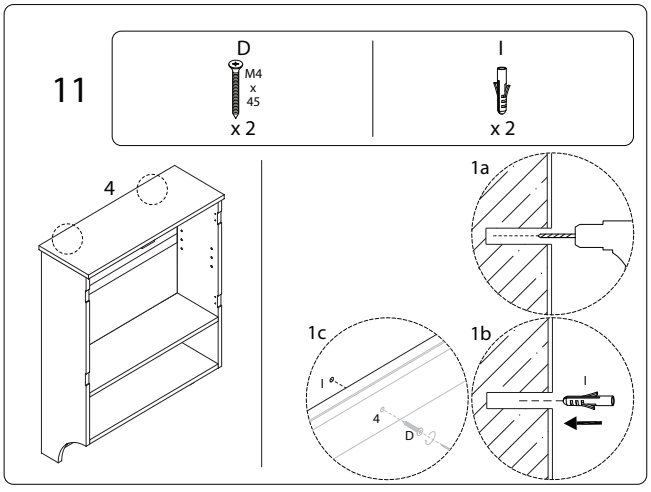
11
D
M4
x
45
x 2
I
x 2
4
1a
1c
I
4
D
1b
I

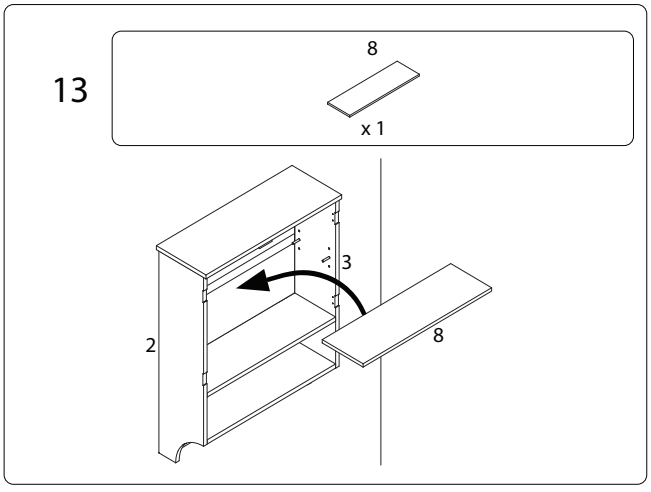
13
8
x 1
3
2
8

14

10	11	E	G	H	K	M
x 1	x 1	M3 x 12 x 6	M4 x 18 x 2	x 4	x 2	x 2

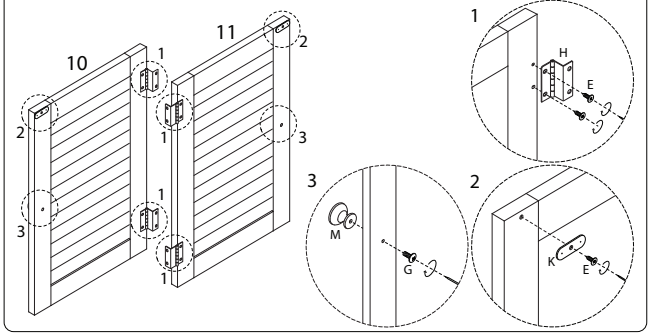

15

E
M3 x 12 x 8

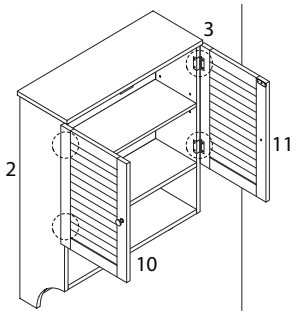

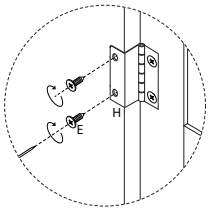

2319/SENGUER/051026/