URUCU

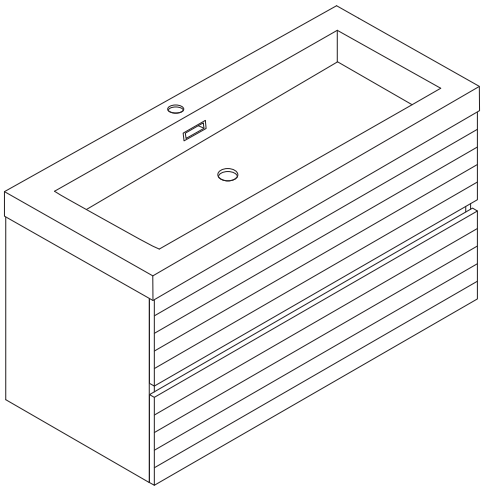

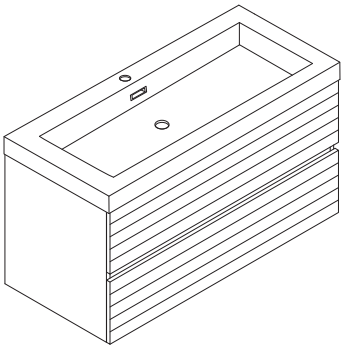

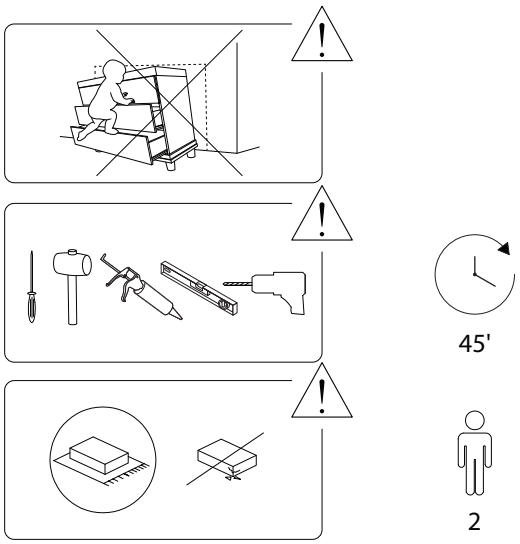

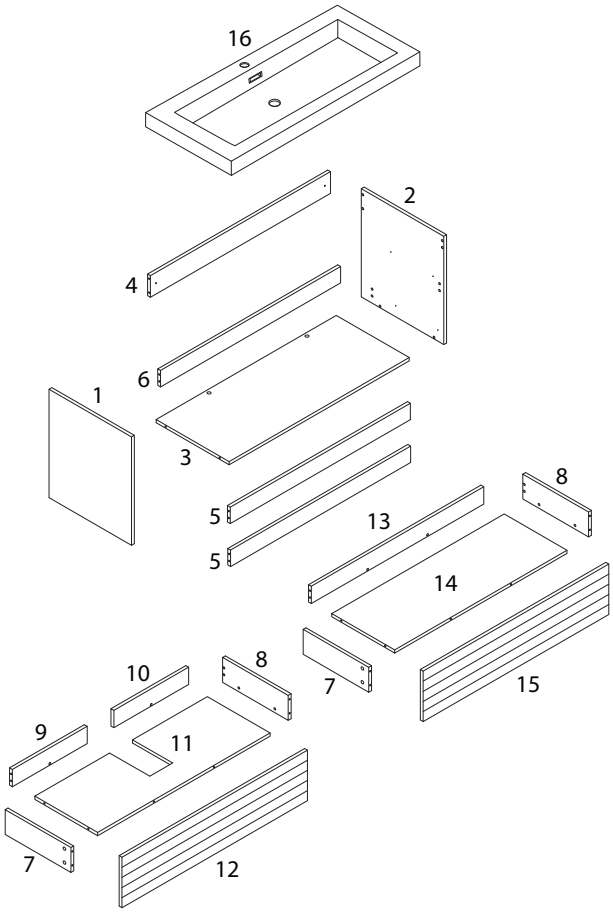

1 x 1	2 x 1	3 x 1
4 x 1	5 x 2	6 x 1
7 x 2	8 x 2	9 x 1
10 x 1	11 x 1	12 x 1
13 x 1	14 x 1	15 x 1
16 x 1		

A	B
	
x 54	x 54
C	**D**
	
x 54	x 39
EL	**ER**
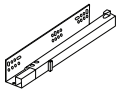	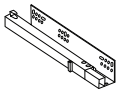
x 2	x 2
F	**G**
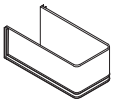	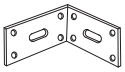
x 1	x 2
H	**J**
	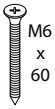
x 2	x 2

1

1	2	D	EL	ER
x 1	x 1	x 8	x 2	x 2

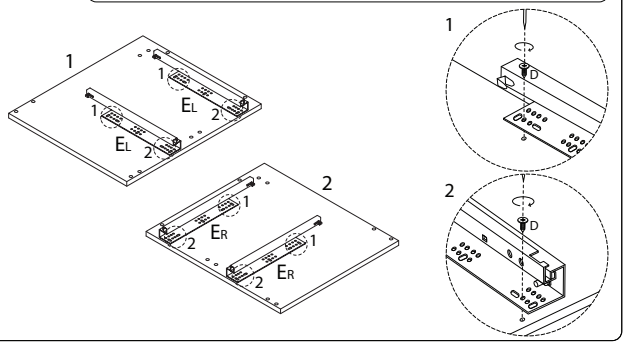

2

B
x 20

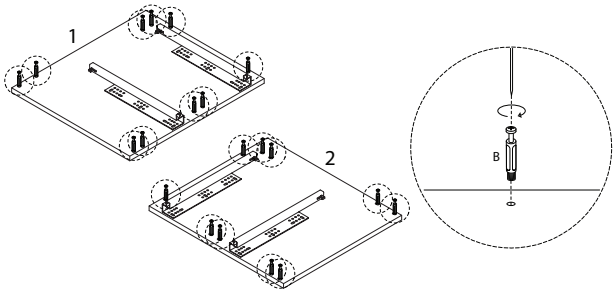

3

3	7	8	9	10
x 1	x 2	x 2	x 1	x 1

12	13	15	B
x 1	x 1	x 1	x 34

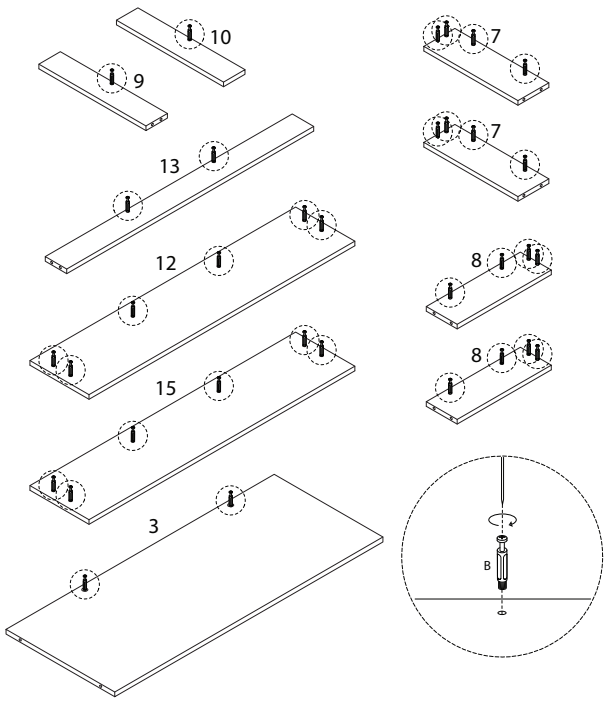

4

6	A
x 1	x 2

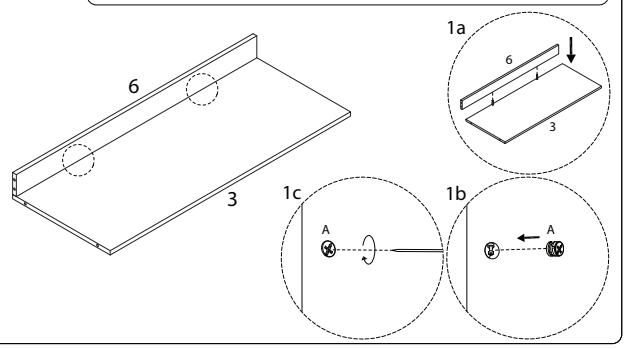

5

4	5
x 1	x 2

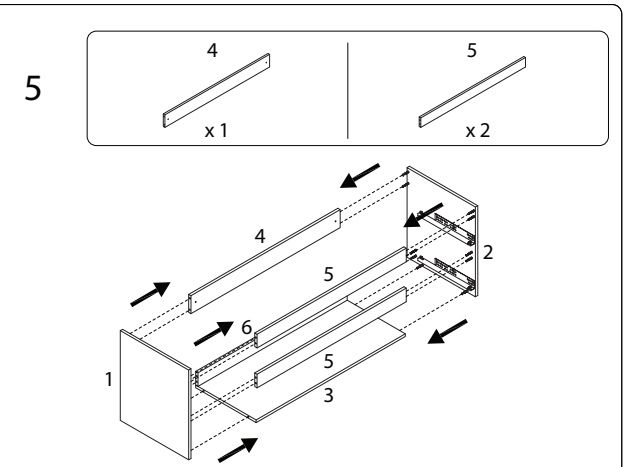

6

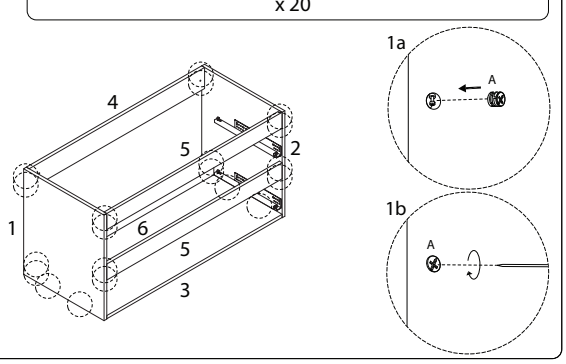

8

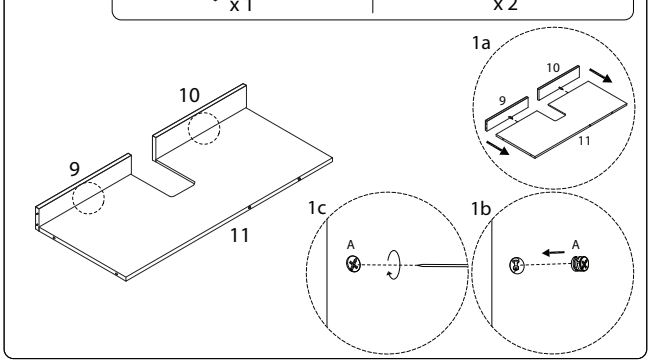

7

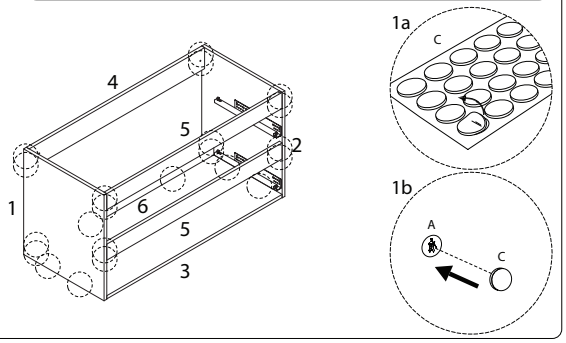

9

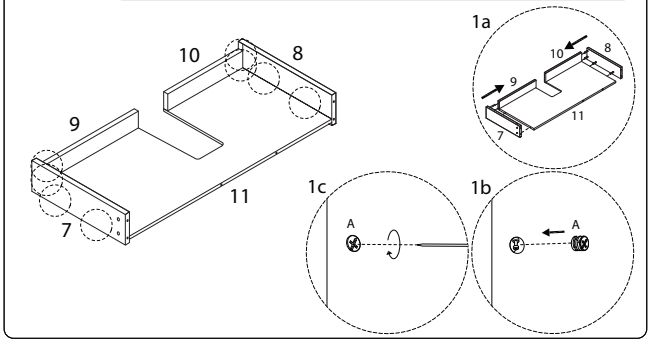

8/15

9/15

10

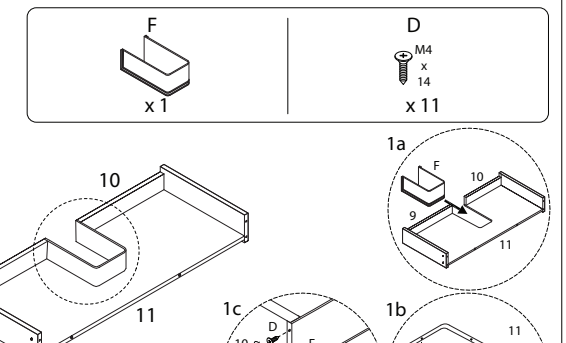

12

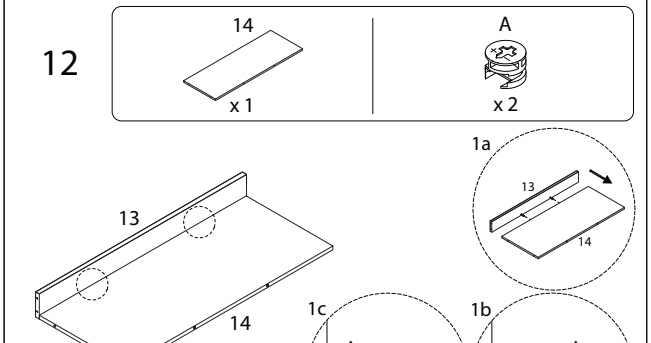

11

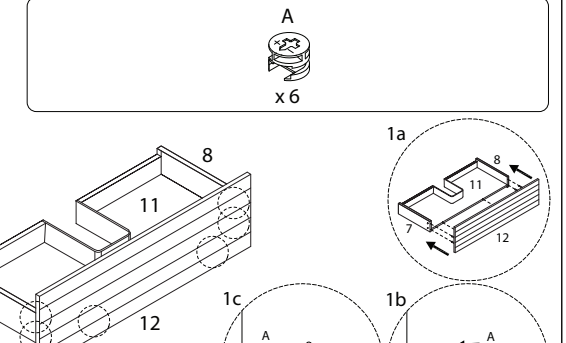

13

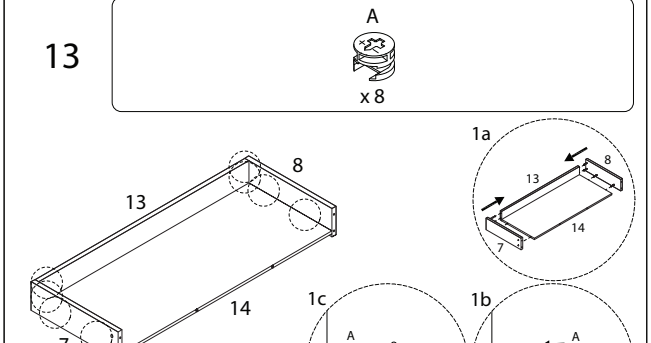

10/15

11/15

14

A

x 6

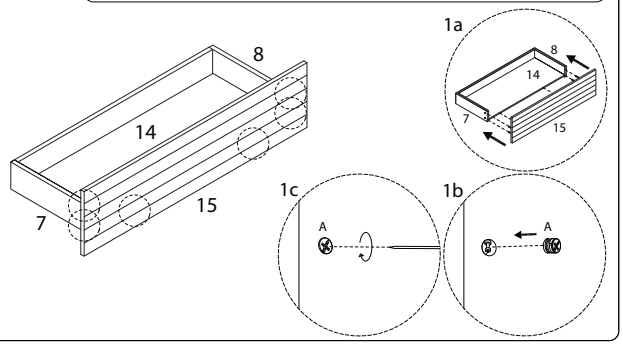

15

C

x 32

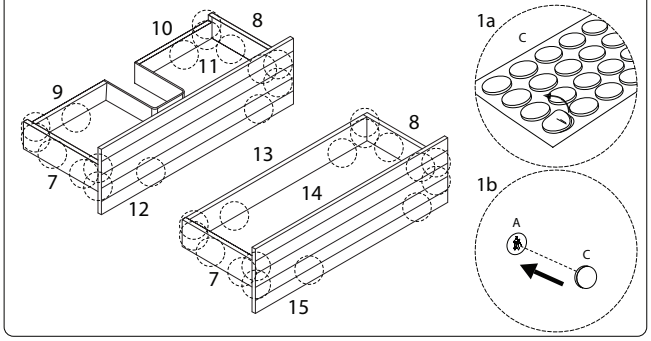

16

D

M4 x 14

x 4

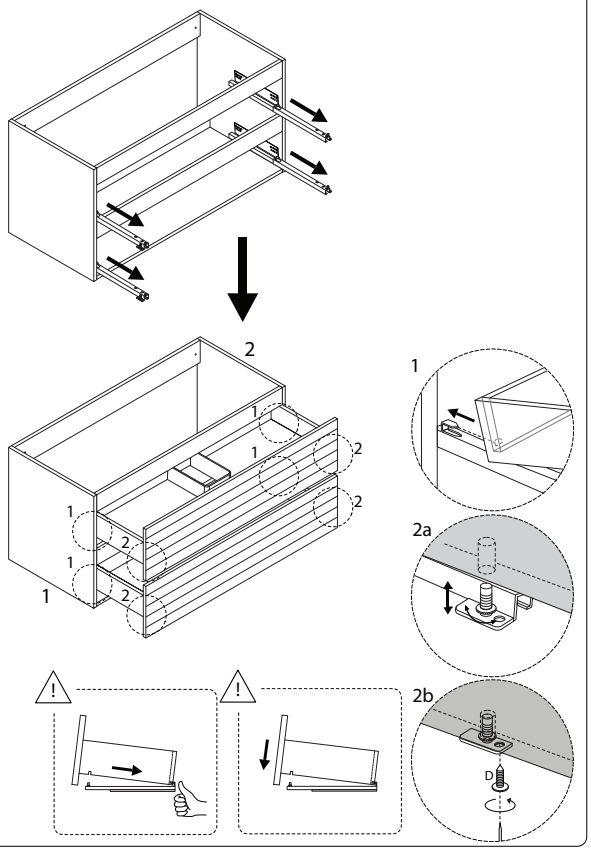

17

D	G	J	H
M4 x 14		M6 x 60	
x 16	x 2	x 2	x 2

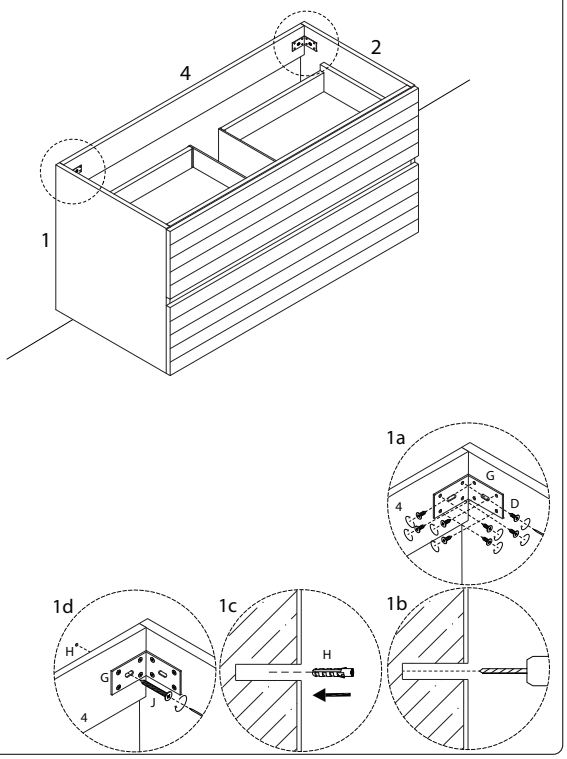

18

16

x 1

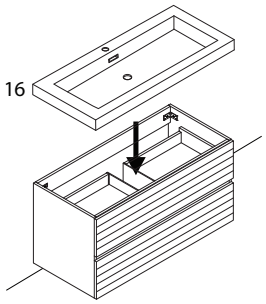

19

