VIRDEN

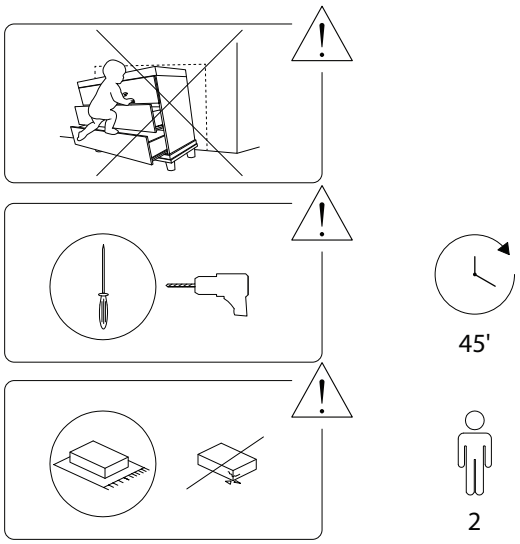
45'
2

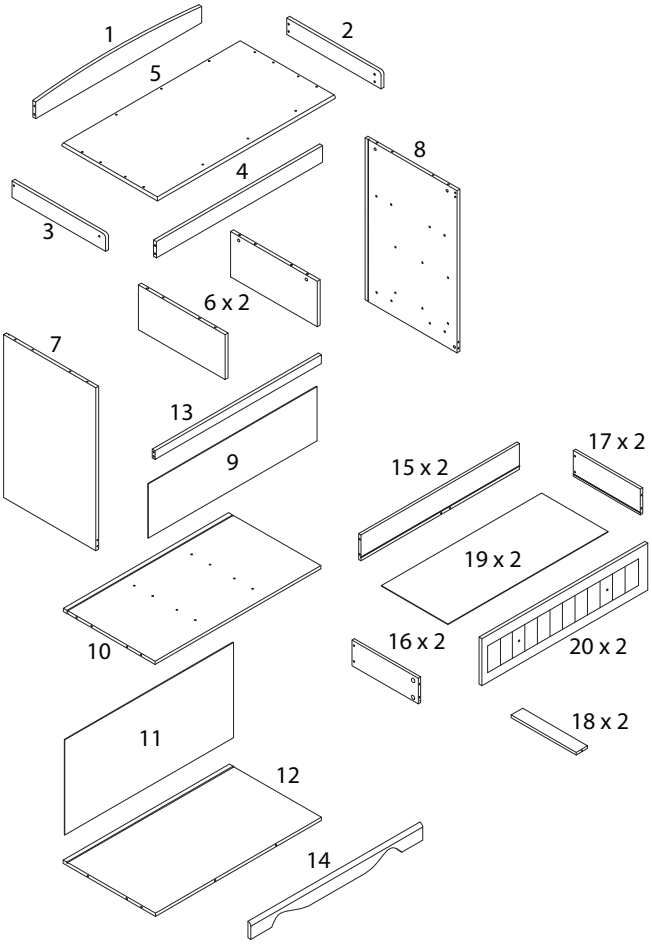
1
2
5
4
3
8
6 x 2
7
13
9
15 x 2
17 x 2
19 x 2
10
16 x 2
20 x 2
18 x 2
11
12
14

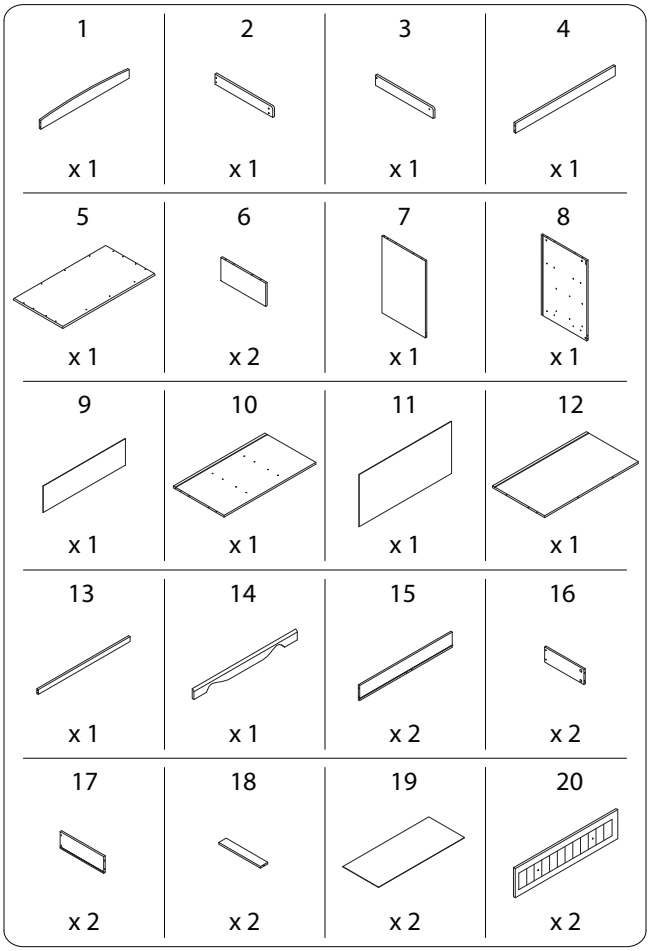
1 x 1
2 x 1
3 x 1
4 x 1
5 x 1
6 x 2
7 x 1
8 x 1
9 x 1
10 x 1
11 x 1
12 x 1
13 x 1
14 x 1
15 x 2
16 x 2
17 x 2
18 x 2
19 x 2
20 x 2

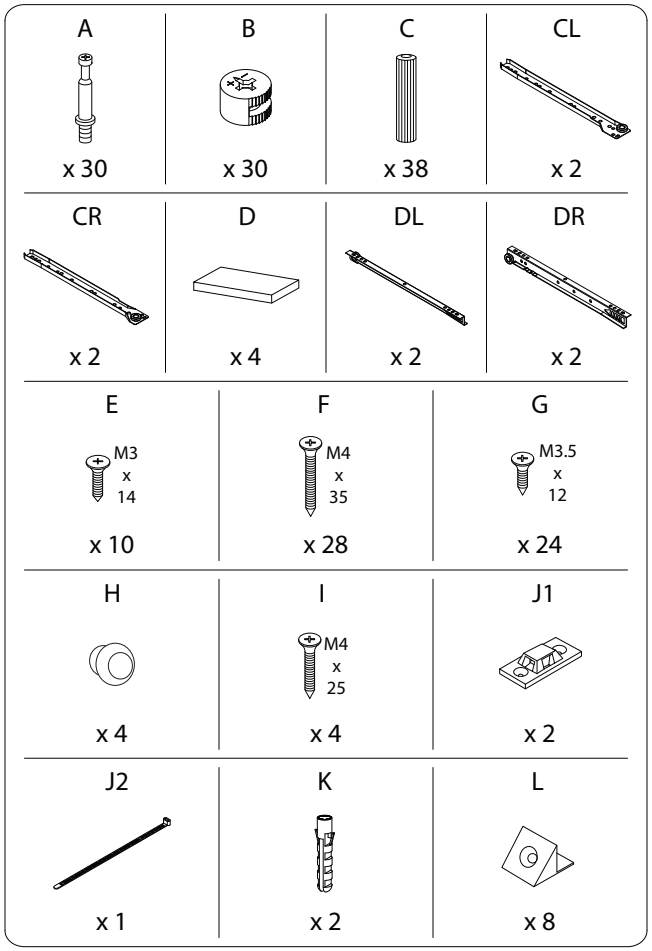
A
x 30
B
x 30
C
x 38
CL
x 2
CR
x 2
D
x 4
DL
x 2
DR
x 2
E
M3 x 14
x 10
F
M4 x 35
x 28
G
M3.5 x 12
x 24
H
x 4
I
M4 x 25
x 4
J1
x 2
J2
x 1
K
x 2
L
x 8

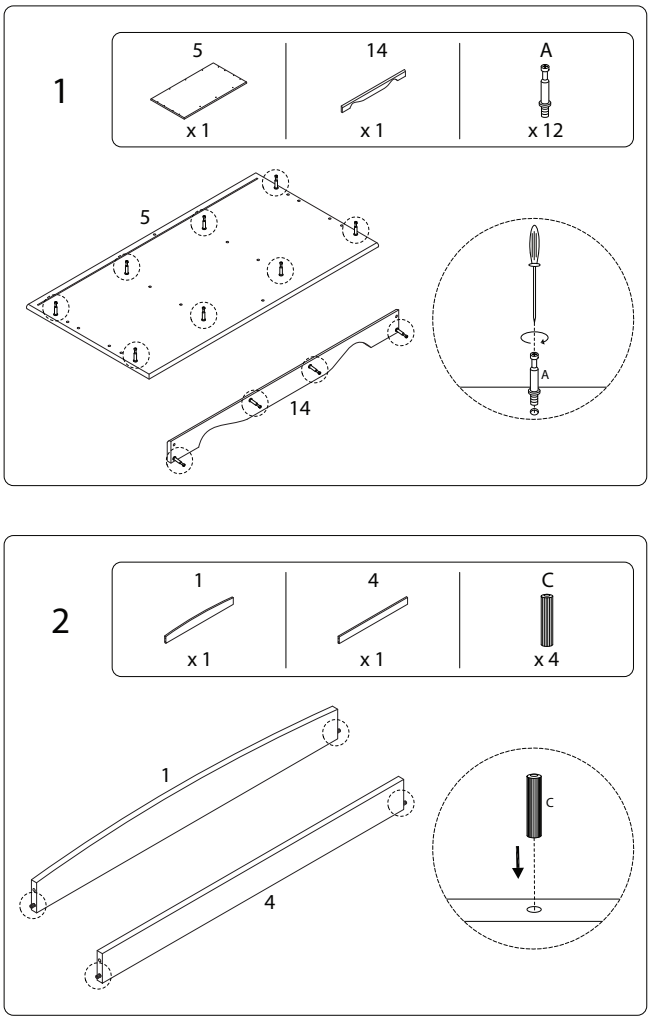
1
5
x 1
14
x 1
A
x 12
5
14
A

2
1
x 1
4
x 1
C
x 4
1
4
C

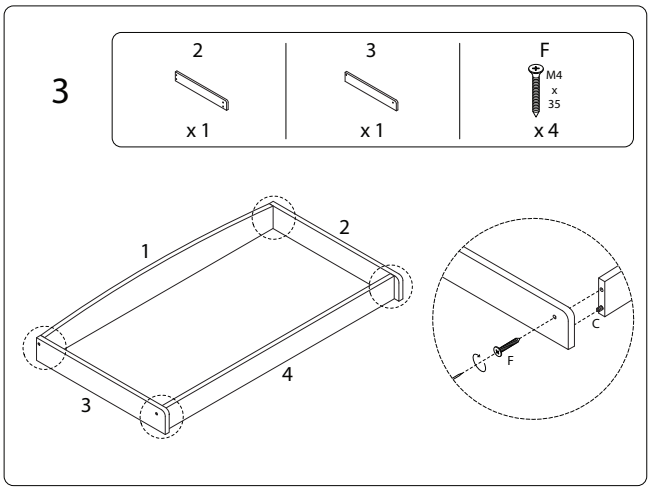
3
2
x 1
3
x 1
F
M4 x 35
x 4
1
2
3
4
C
F

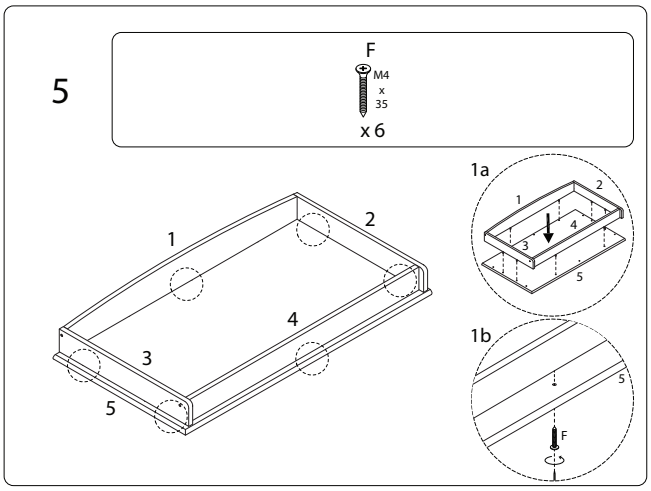
5
F
M4 x 35
x 6
1
2
3
4
5
1a
1b
F

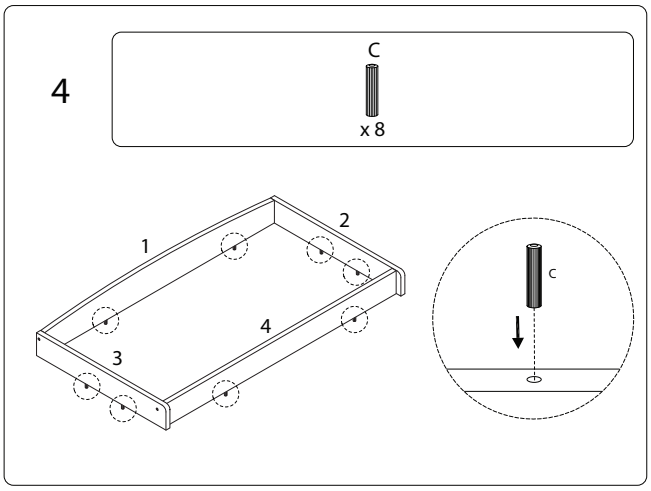
4
C
x 8
1
2
3
4
C

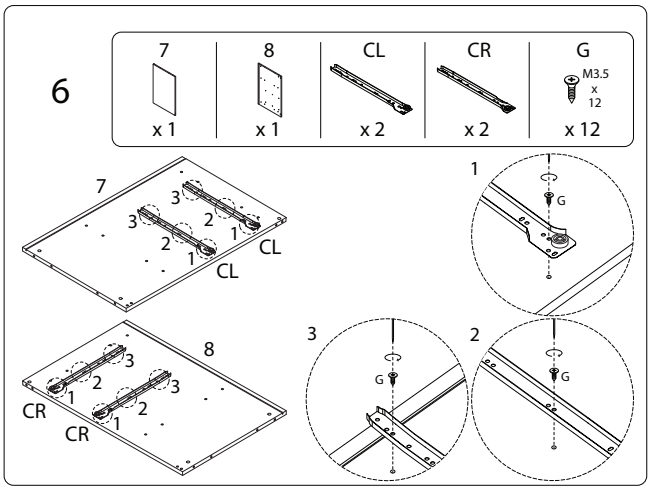
6
7
x 1
8
x 1
CL
x 2
CR
x 2
G
M3.5 x 12
x 12
7
CL
CL
8
CR
CR
1
2
3
G

7

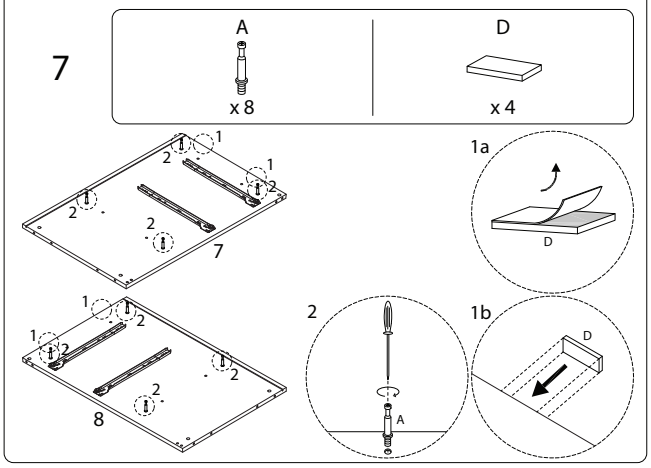

8

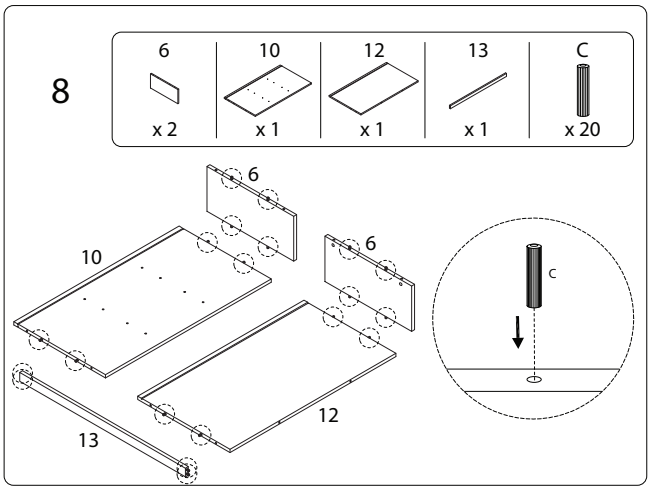

9

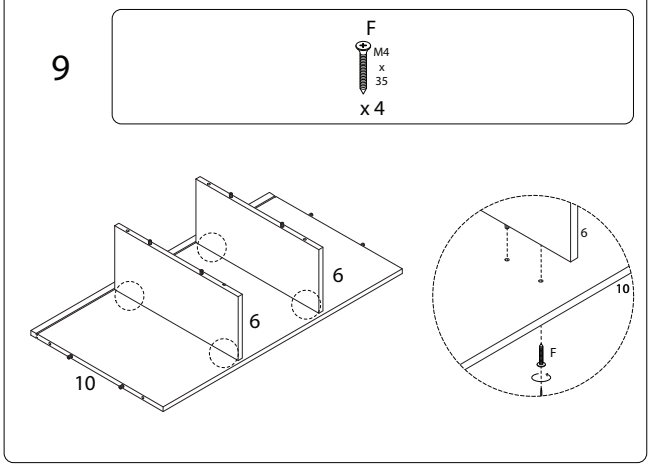

10

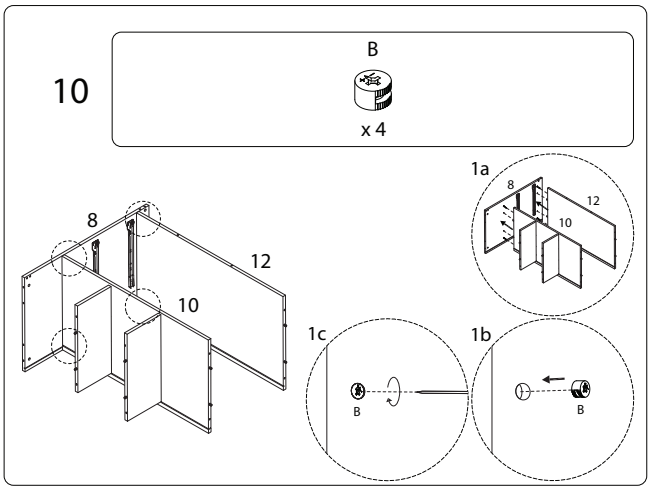

11

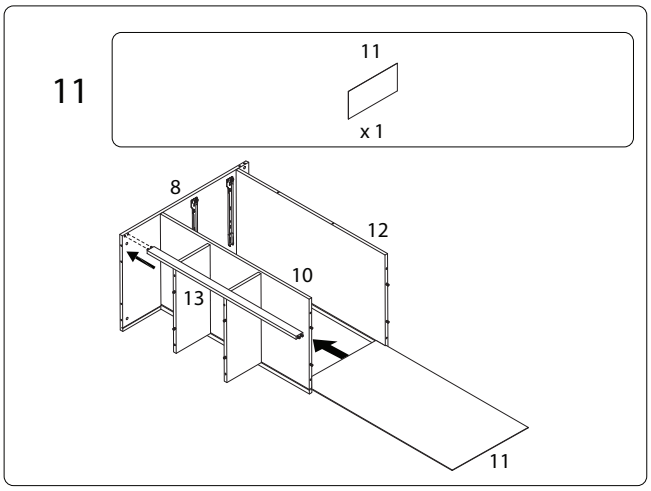

12

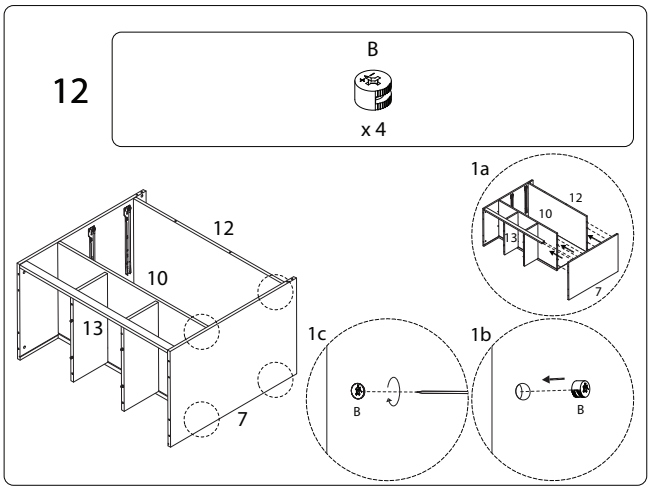

13

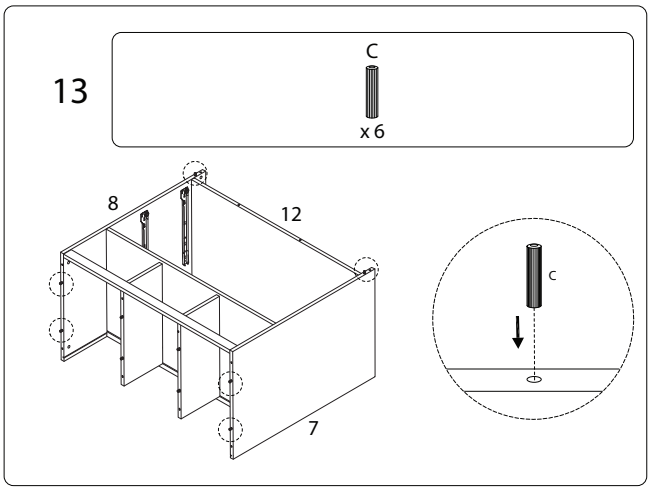

14

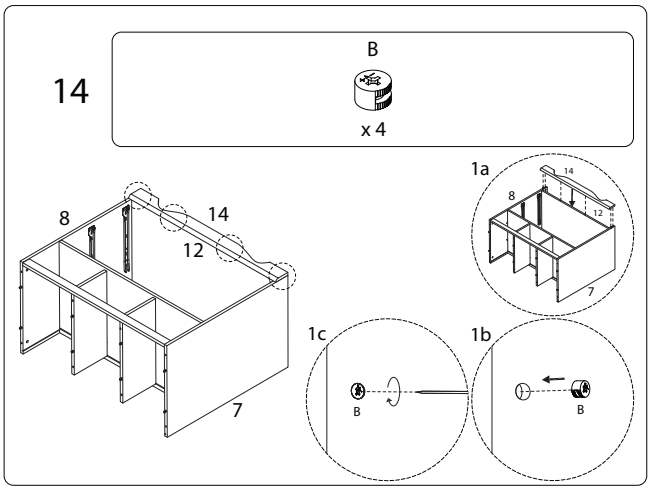

15

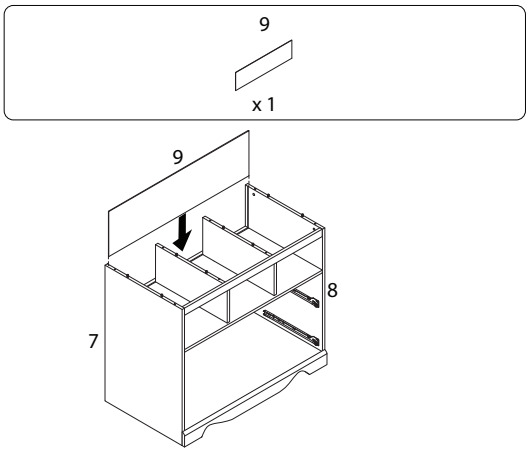

17 x 2

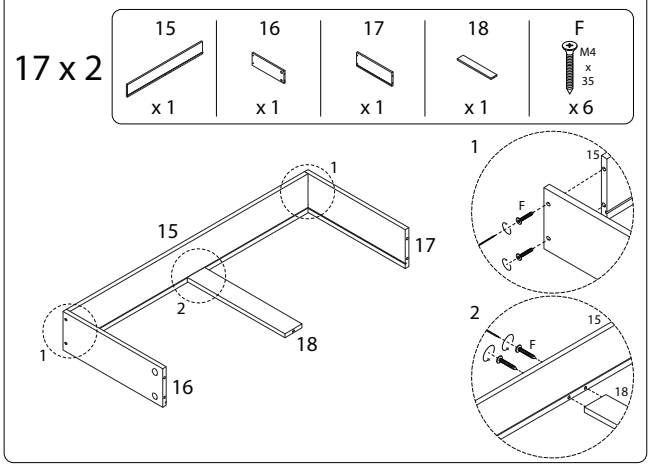

16

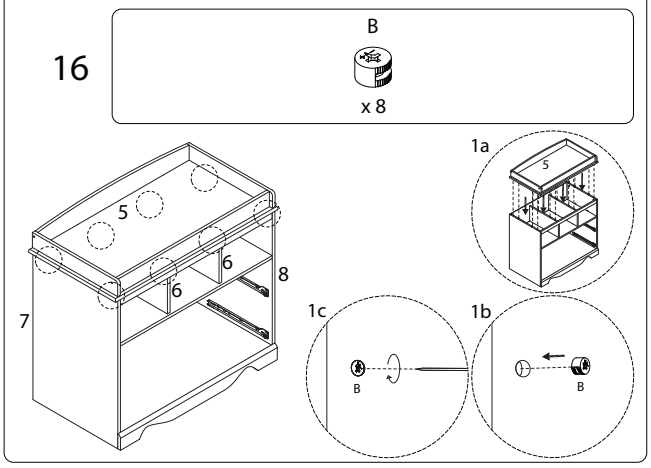

18 x 2

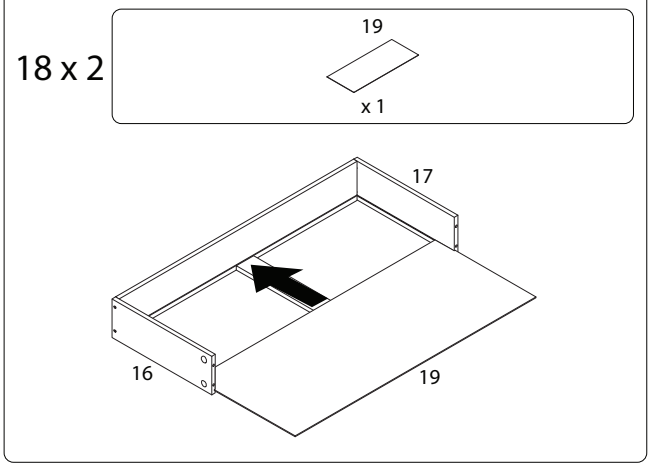

19 x 2

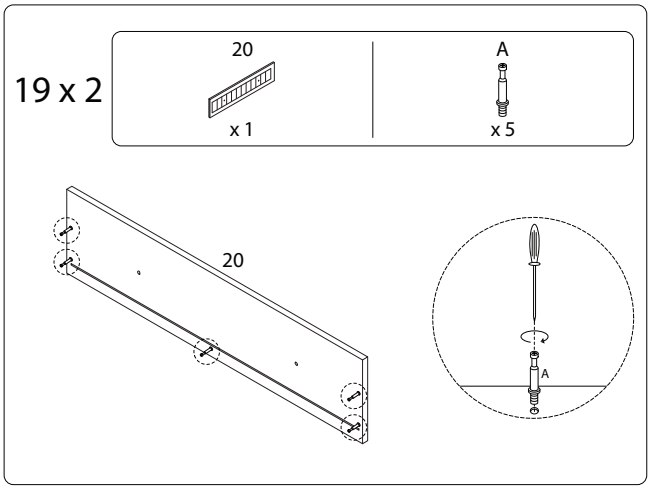

21 x 2

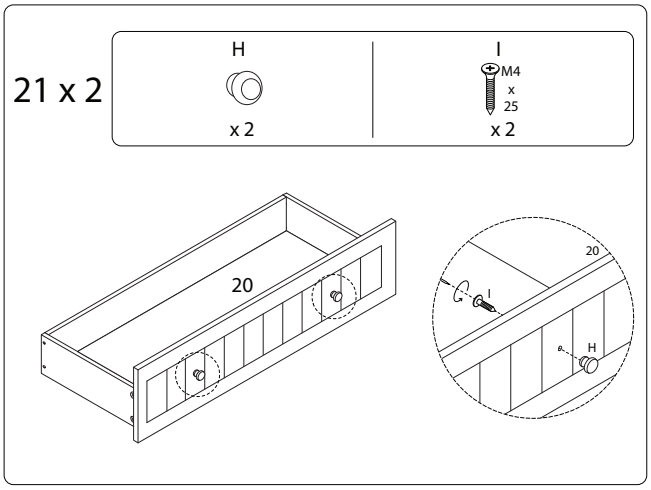

20 x 2

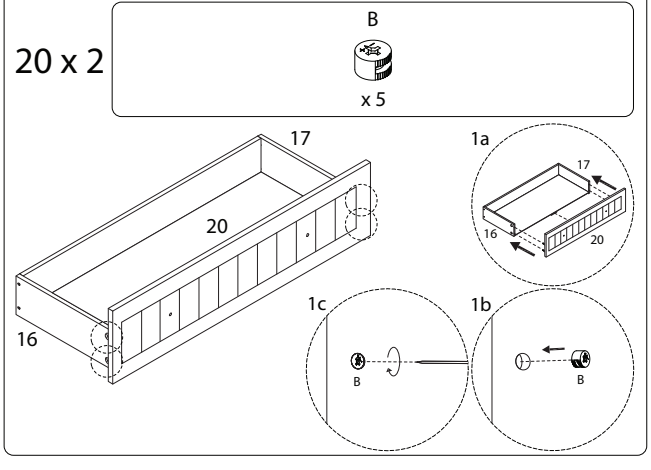

22 x 2

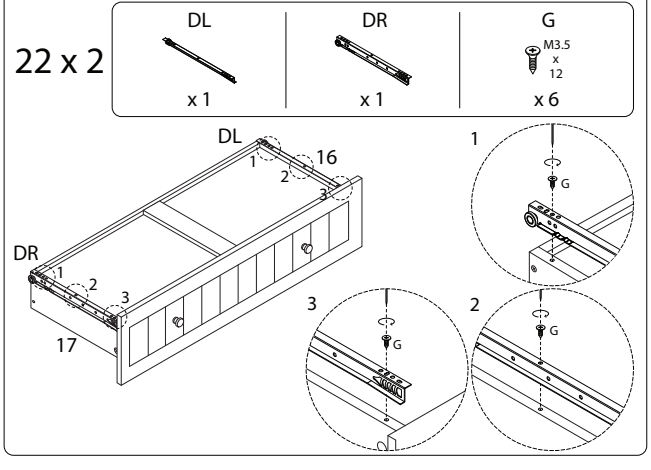

23

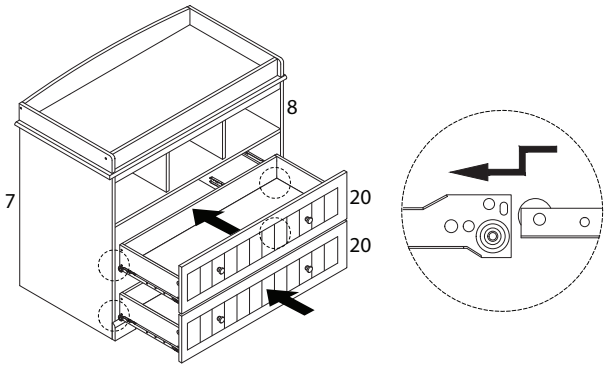

24

E	L
M3 x 14	
x 8	x 8

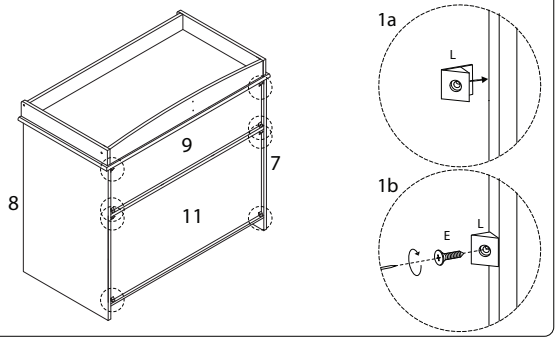

25

E	J1
M3 x 14	
x 1	x 1

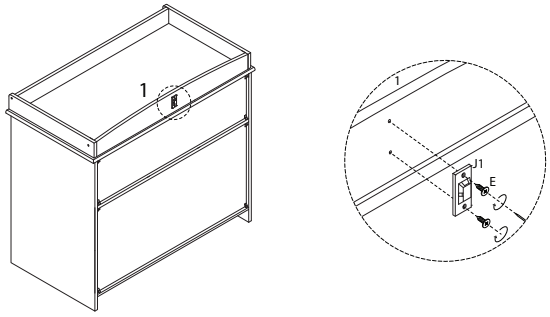

26
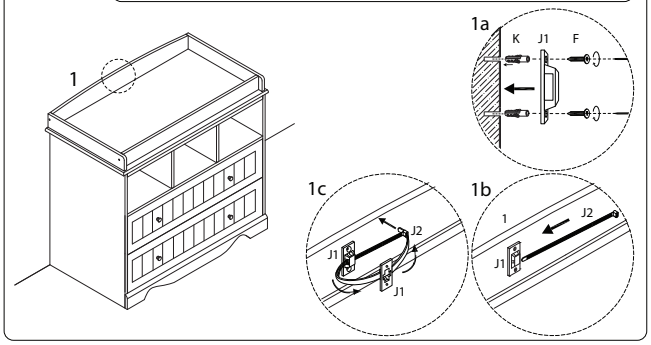
F	J1	J2	K
M4 x 35			
x 2	x 1	x 1	x 2