



40'



1

1/11

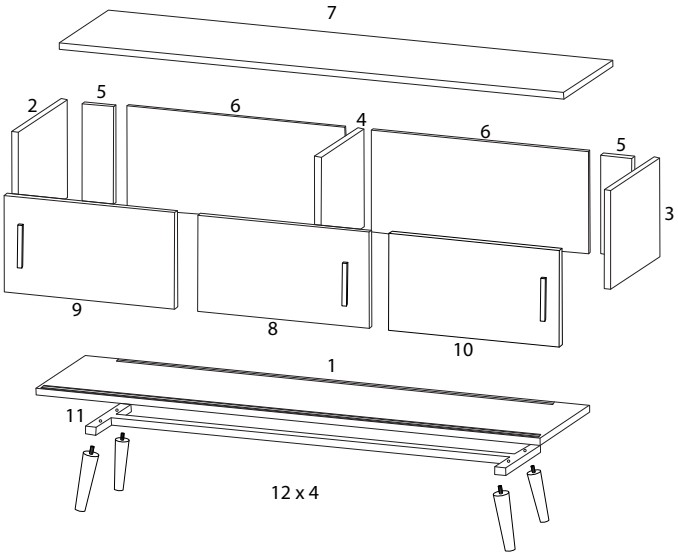

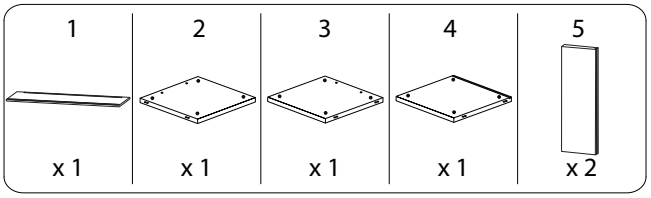

2/11

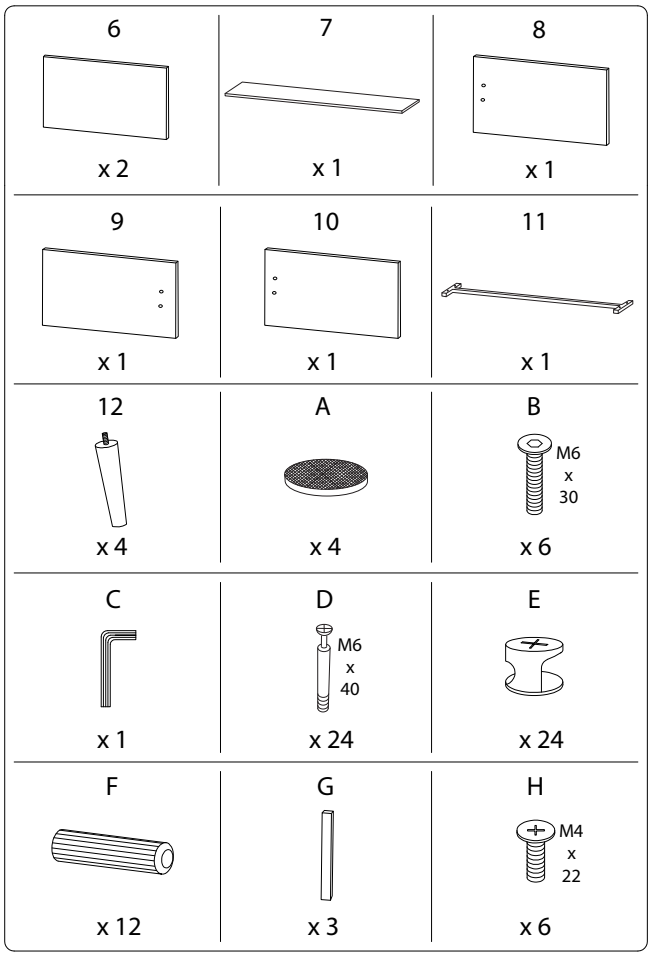

3/11

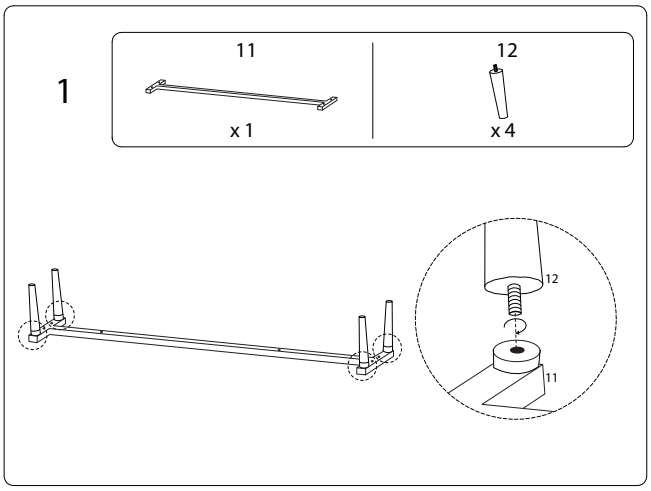

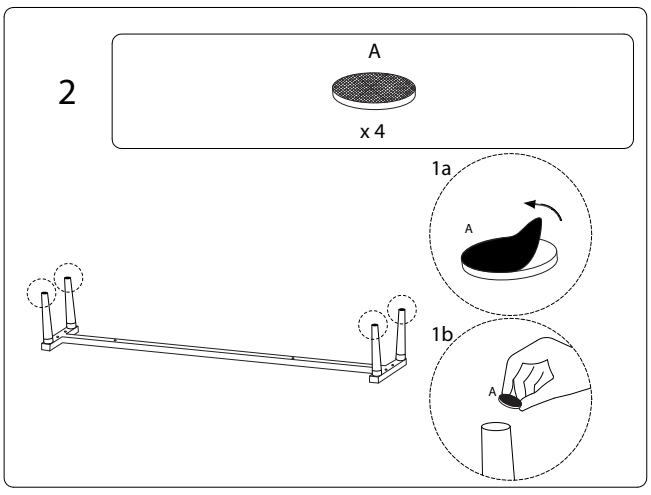

4/11

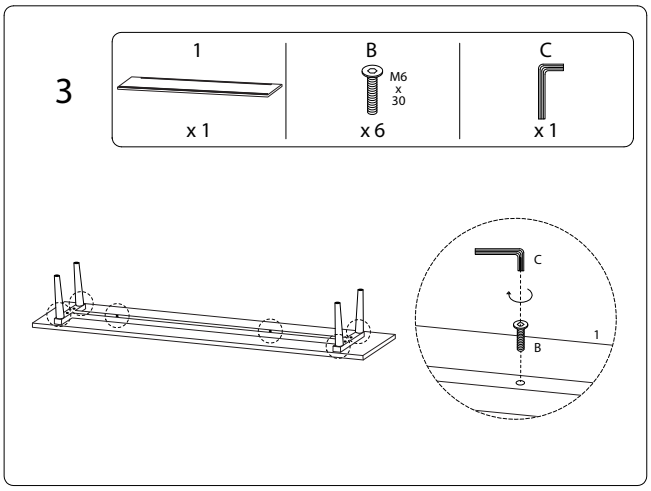
3
1
x 1
B
M6
x
30
x 6
C
x 1
C
B
1

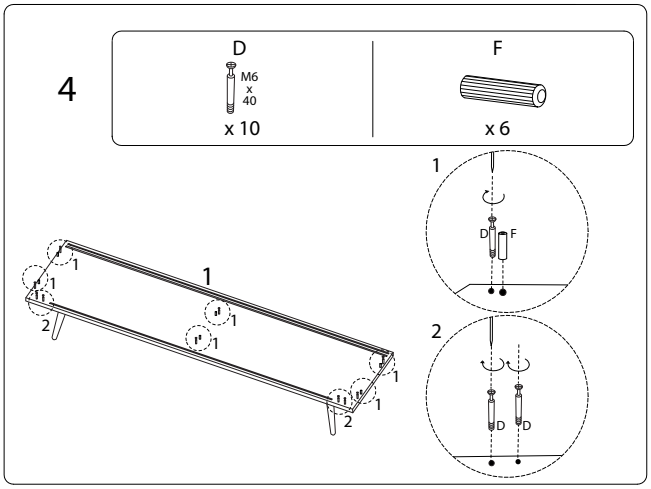
4
D
M6
x
40
x 10
F
x 6
1
D
F
2
D
D
1
1
1
2
1
1
1
1
2

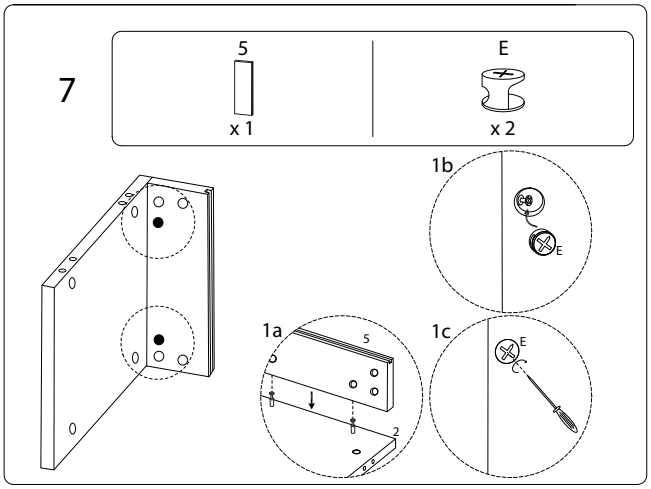
7
5
x 1
E
x 2
1b
E
1a
5
2
1c
E

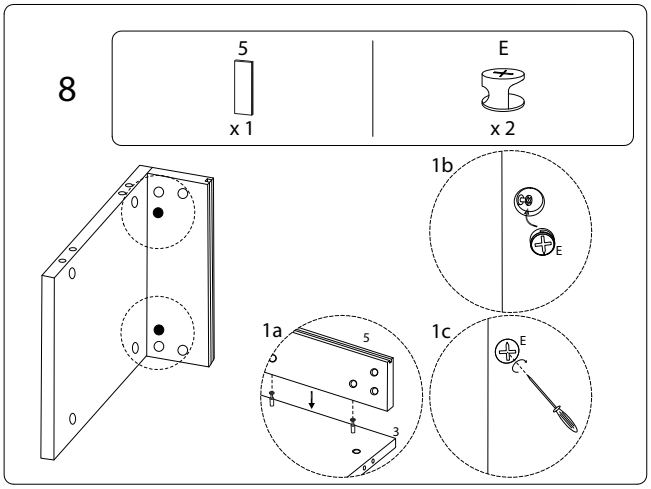
8
5
x 1
E
x 2
1b
E
1a
5
3
1c
E

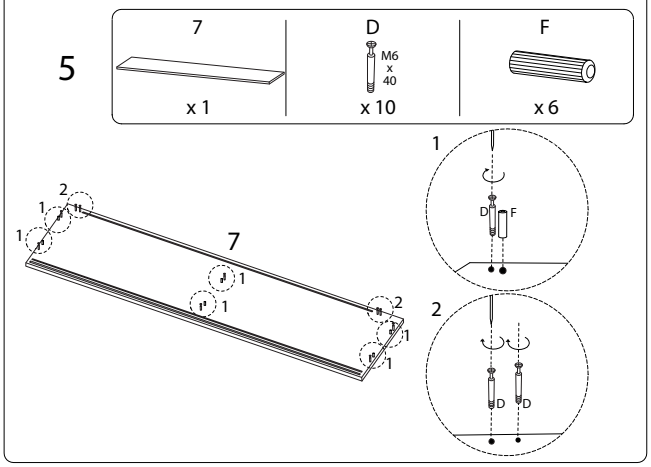
5
7
x 1
D
M6
x
40
x 10
F
x 6
1
D
F
2
D
D
2
1
1
7
1
1
2
1
1

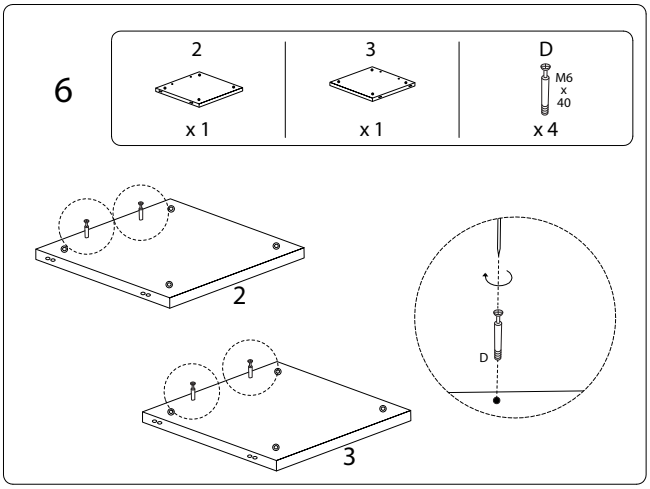
6
2
x 1
3
x 1
D
M6
x
40
x 4
2
D
3

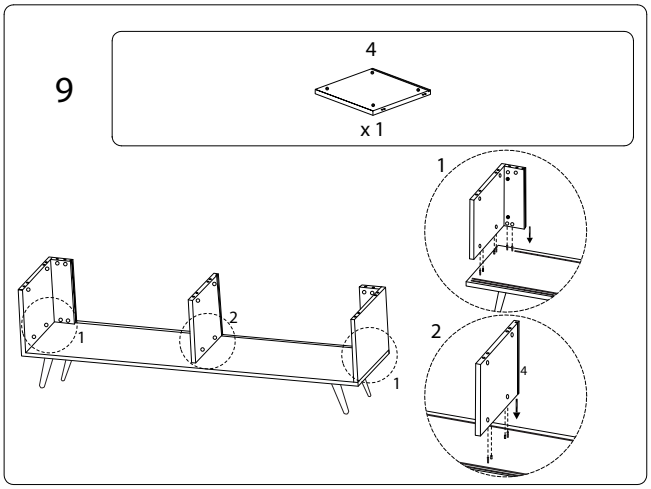
9
4
x 1
1
2
1
2
1
4

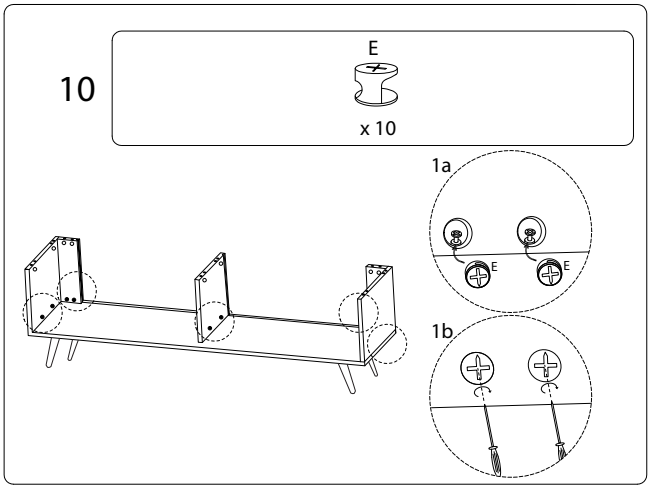
10
E
x 10
1a
E
E
1b

11

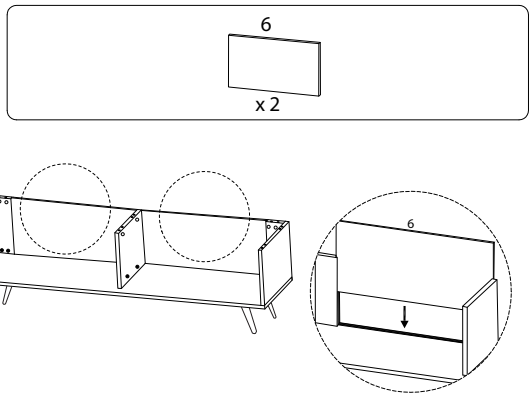

12

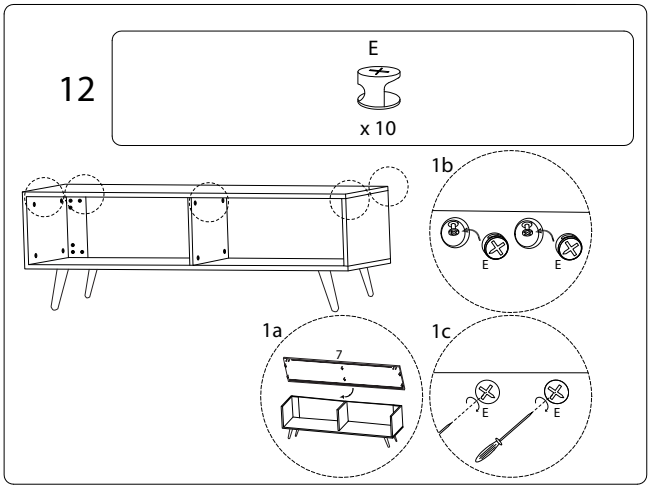

9/11

13

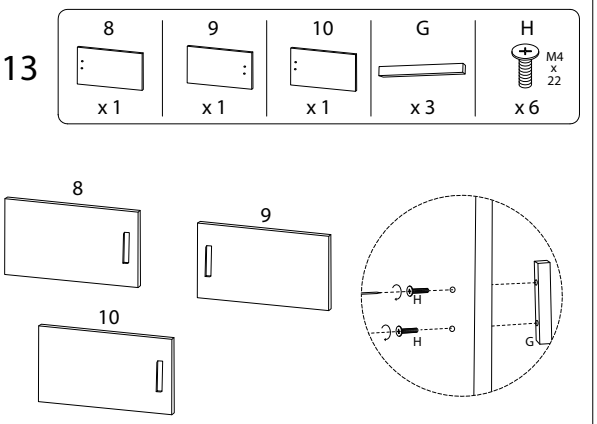

!

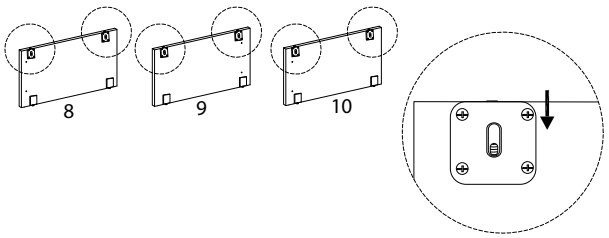

10/11

14

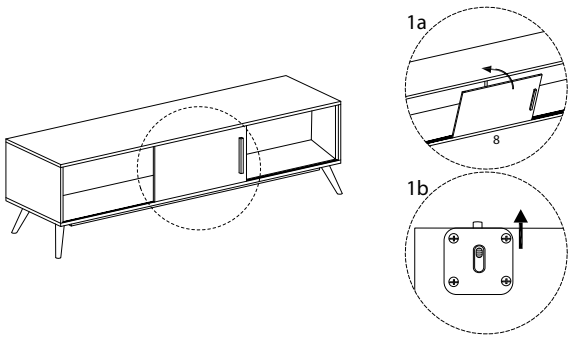

15

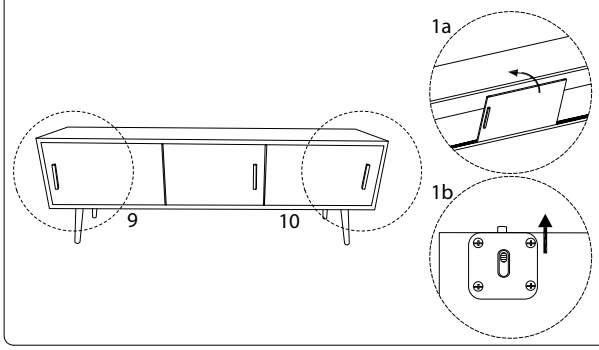

11/11