MIMILI

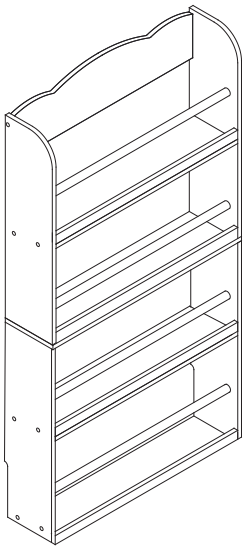

1/18

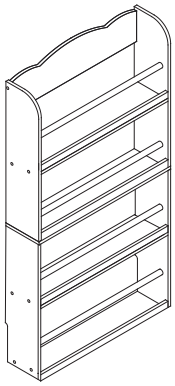

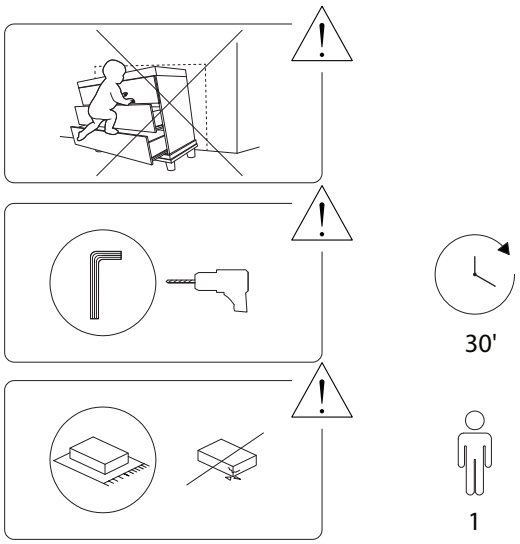

2/18

2341/MIMILI/131026

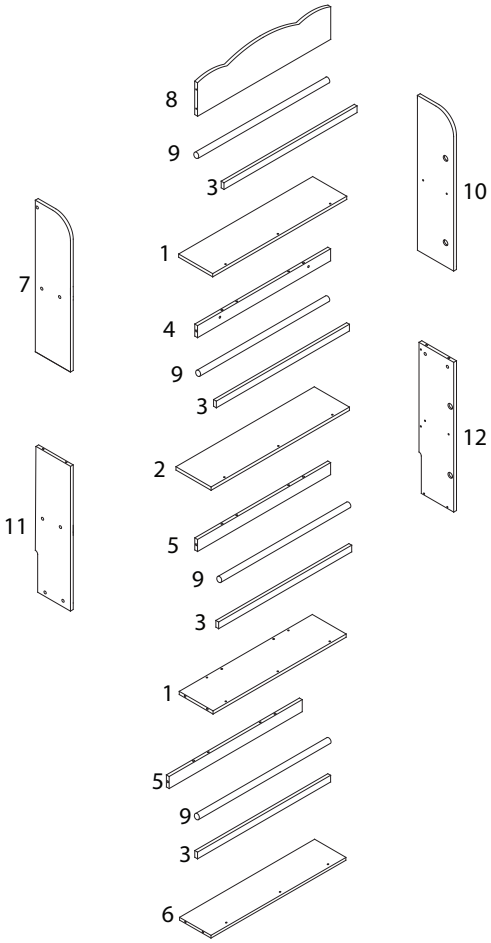

3/18

1 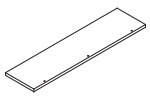 x 2	2 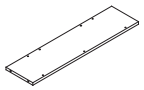 x 1	3 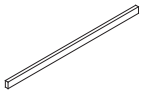 x 4	4 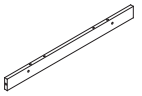 x 1
5 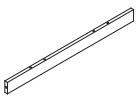 x 2	6 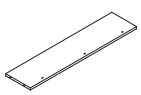 x 1	7  x 1	8 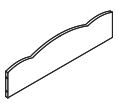 x 1
9 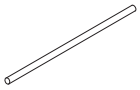 x 4	10  x 1	11  x 1	12  x 1
A  x 10	B  x 10	C  x 14	D  x 2
E  x 18	F 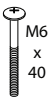 x 14	G  x 14	

4/18

2341/MIMILI/131026

1

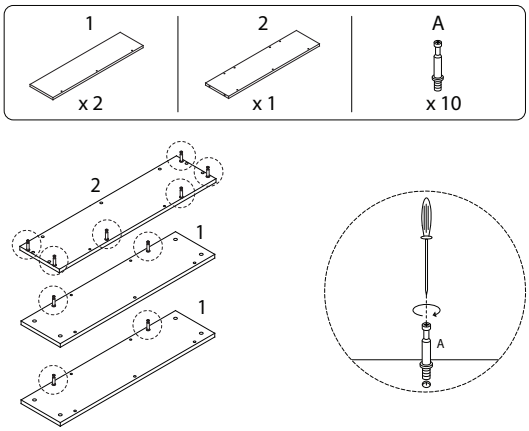
1
x 2
2
x 1
A
x 10
2
1
1
A

2

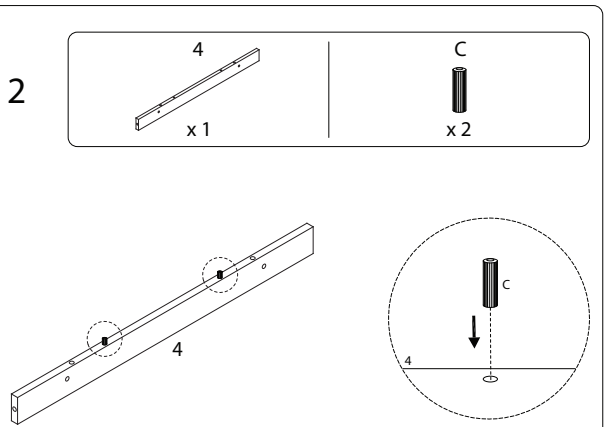
4
x 1
C
x 2
4
C
4

3

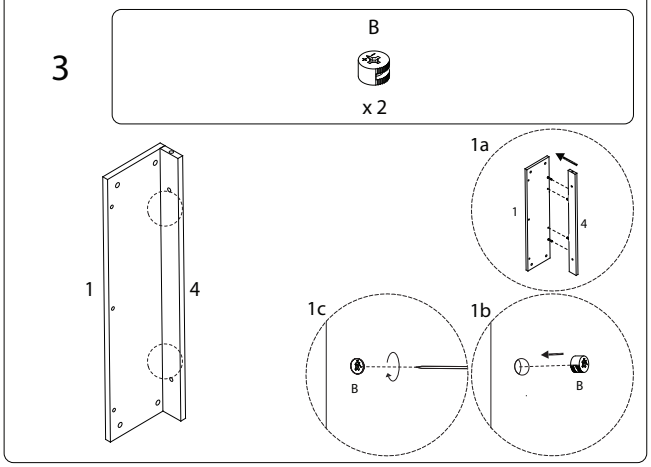
B
x 2
1
4
1a
1
4
1c
1b
B
B

4

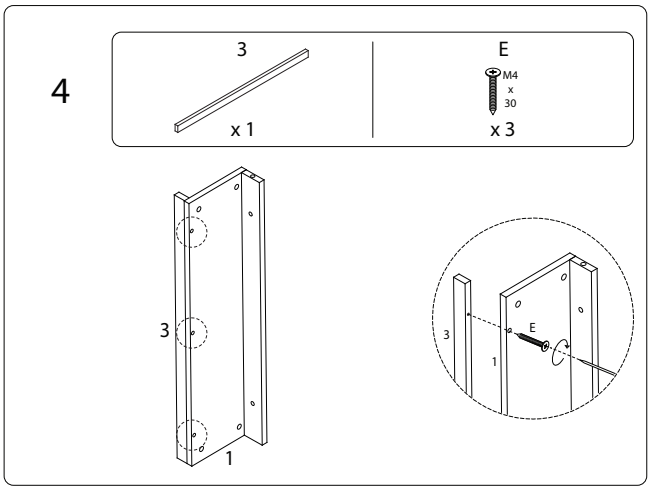
3
x 1
E
M4
x
30
x 3
3
1
3
E
1

5

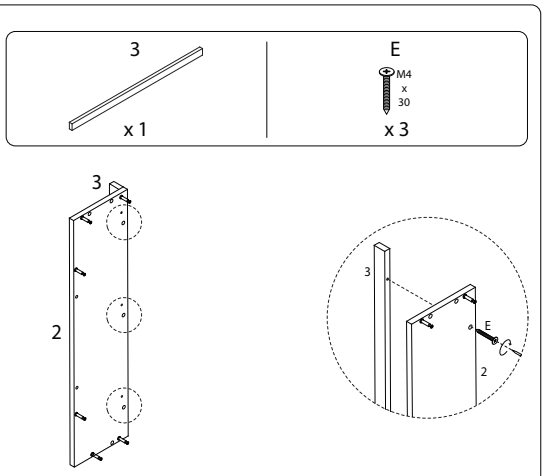
3
x 1
E
M4
x
30
x 3
3
2
3
E
2

6

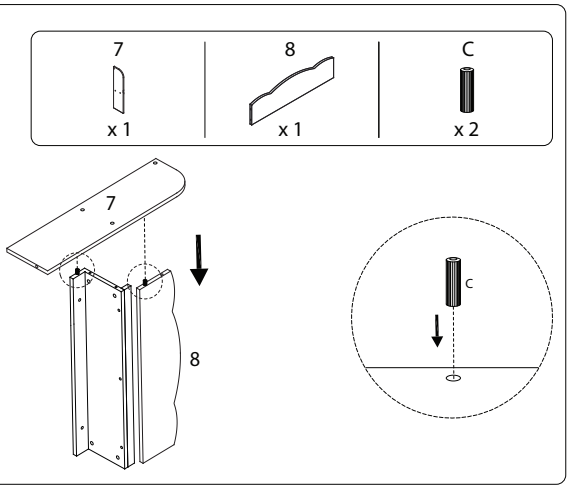
7
x 1
8
x 1
C
x 2
7
8
C

7

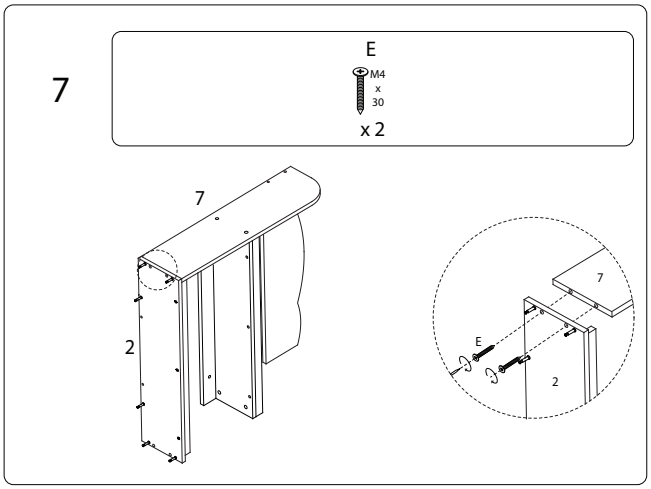
E
M4
x
30
x 2
7
2
7
E
2

8

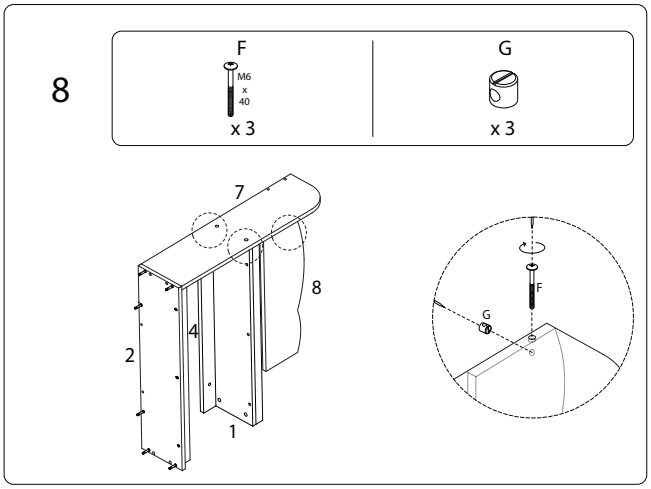
F
M6
x
40
x 3
G
x 3
7
8
2
4
1
F
G

9

9

x 2

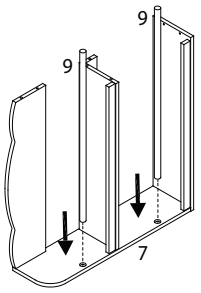

10

C

x 2

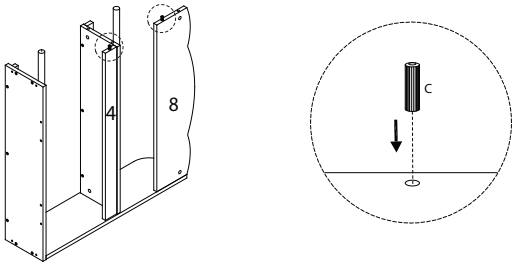

11

10

x 1

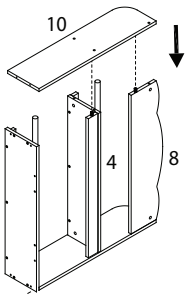

12

F

M6 x 40

x 3

G

x 3

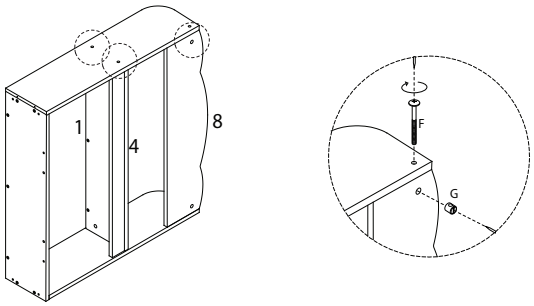

13

E

M4 x 30

x 2

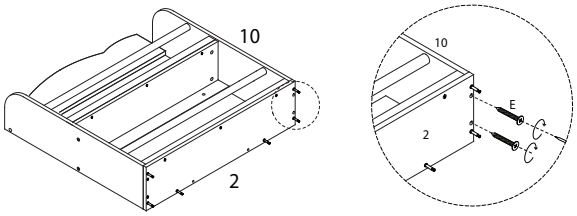

14

5

x 1

C

x 2

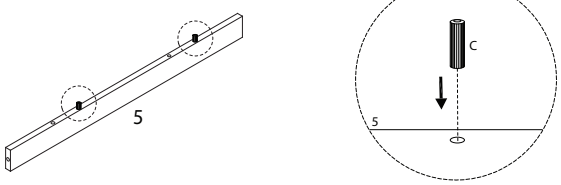

15

B

x 2

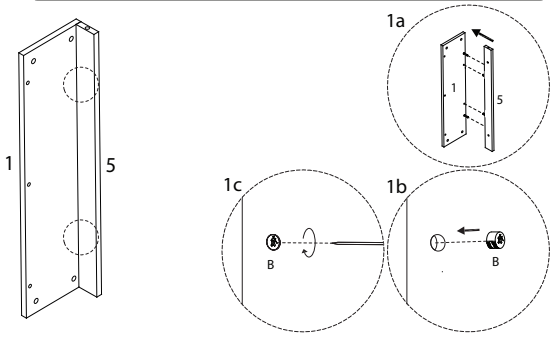

16

3

x 1

E

M4 x 30

x 3

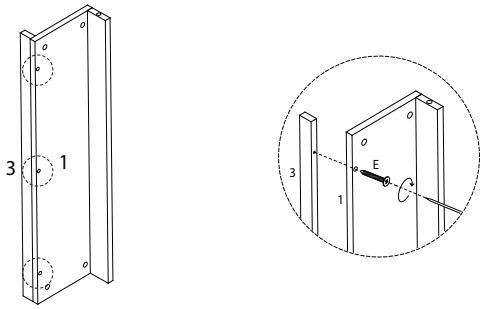

17

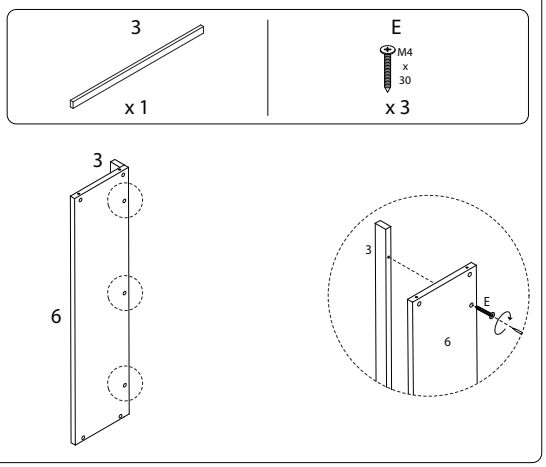

18

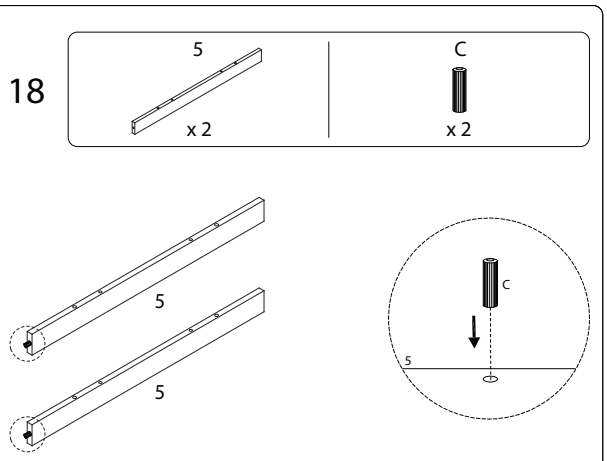

19

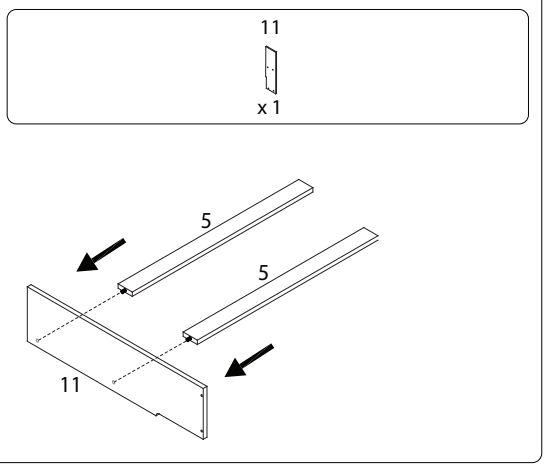

20

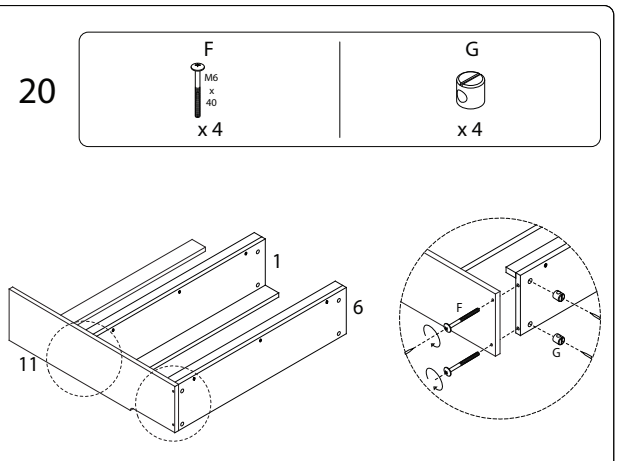

21

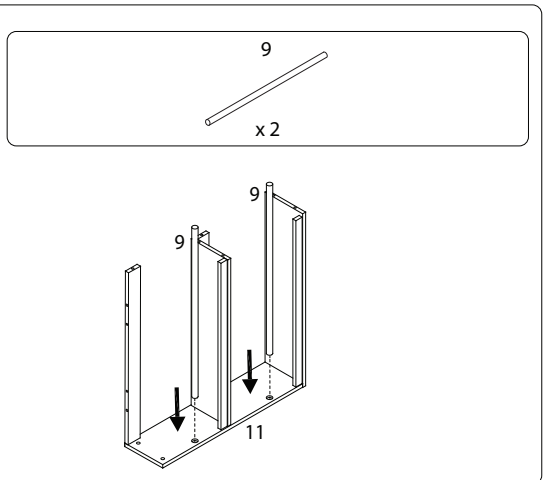

22

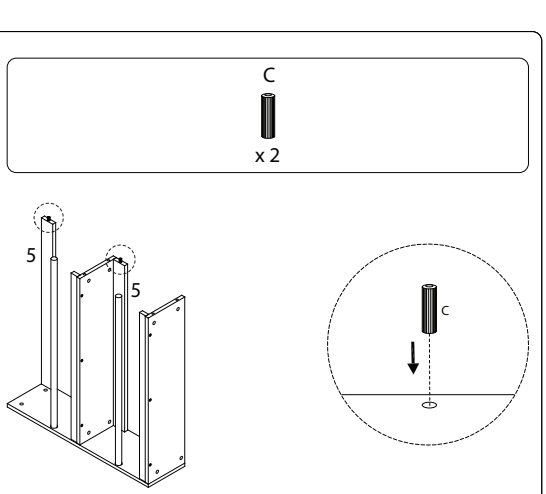

23

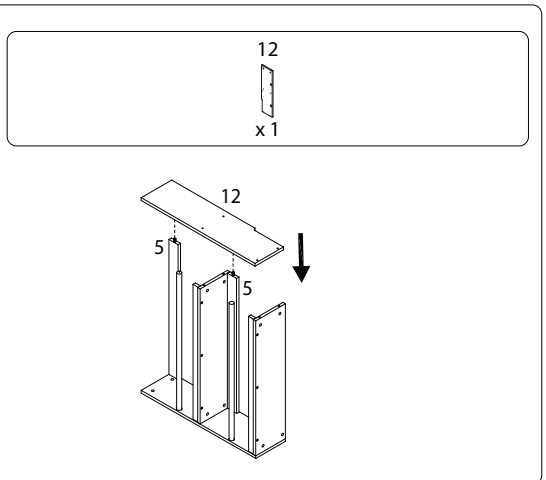

24

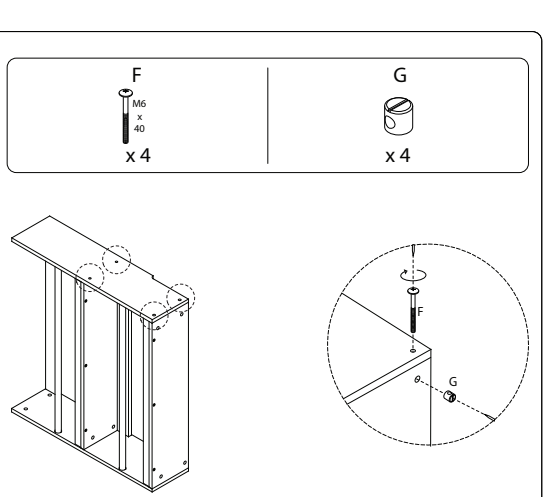

25

C

x 2

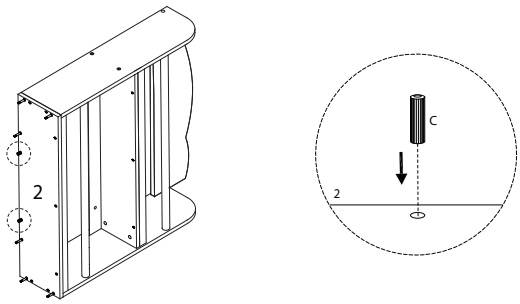

26

B

x 6

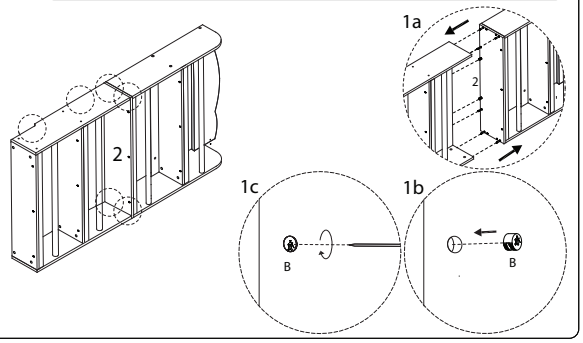

27

D

x 2

E

M4 x 30

x 2

