COVENTRY

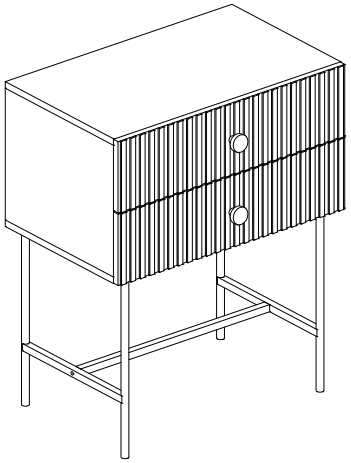

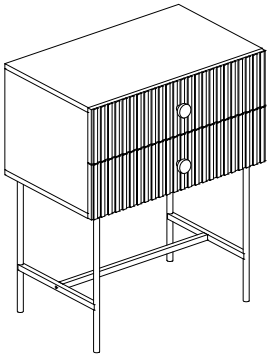

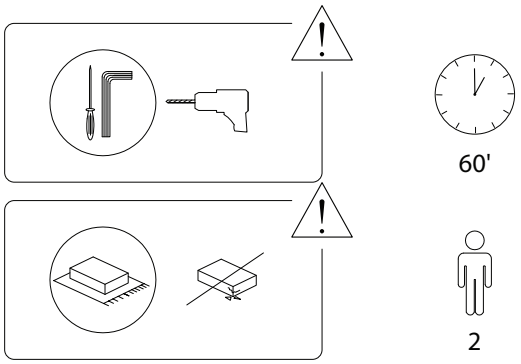

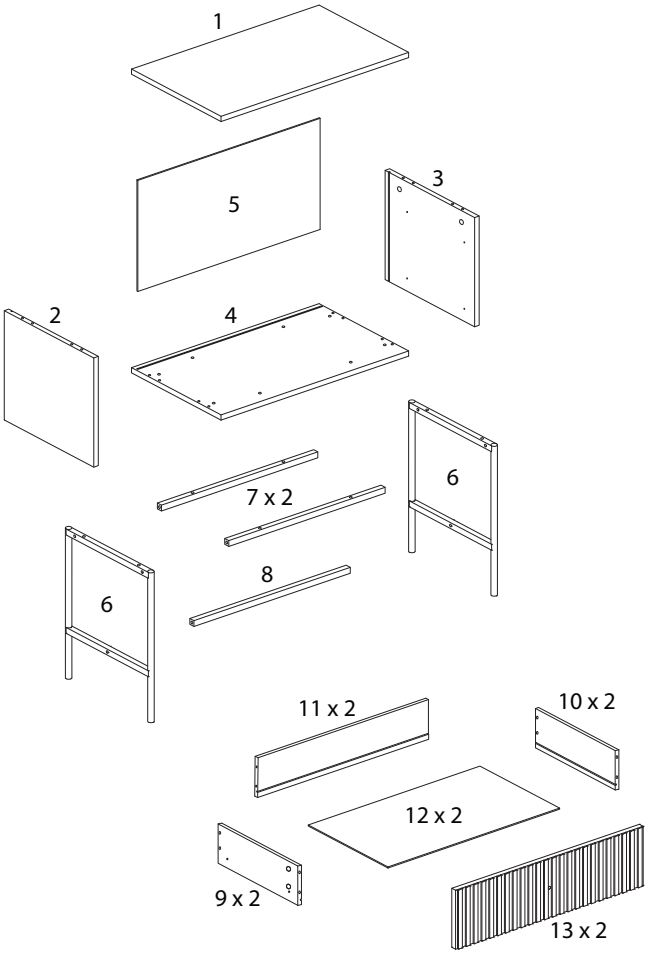

1 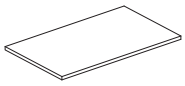 x 1	2 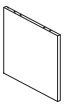 x 1	3 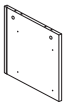 x 1
4 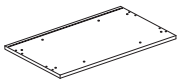 x 1	5 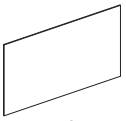 x 1	6 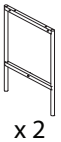 x 2
7  x 2	8  x 1	9  x 2
10  x 2	11  x 2	12 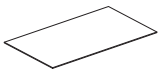 x 2
13 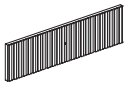 x 2	A  x 12	B  x 12

C	D	E
	 M3 x 12	 M4 x 35
x 8	x 16	x 13
F	G	H
 M6 x 25		 M4 x 20
x 14	x 1	x 2
I	J	K
	 M4 x 10	
x 2	x 1	x 2
L	M	N
	 M4 x 16	
x 1	x 4	x 4
O	P	Q
	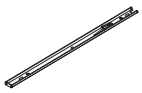	
x 4	x 4	x 1

680/COVENTRY/081024/

!

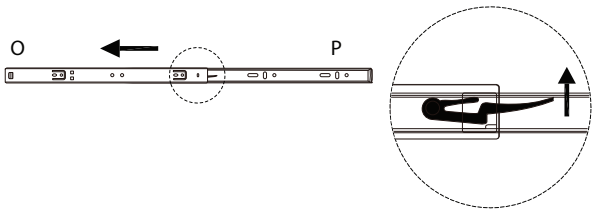

1

2	3	D	O
x 1	x 1	M3 x 12 x 8	x 4

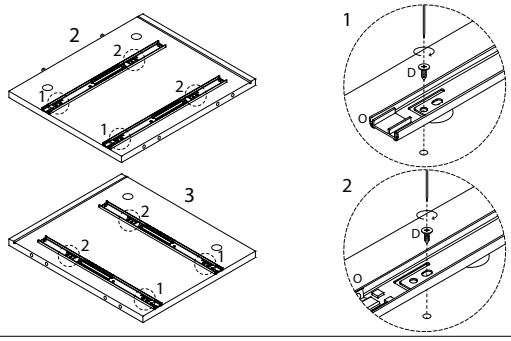

680/COVENTRY/081024/

2

C
x 8

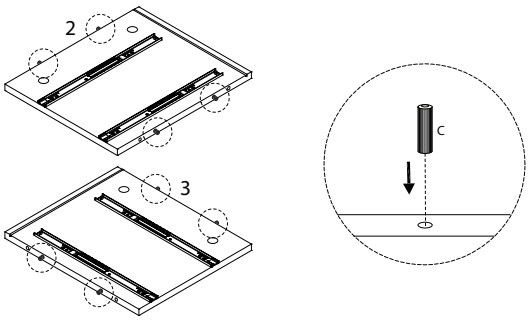

4

B
x 4

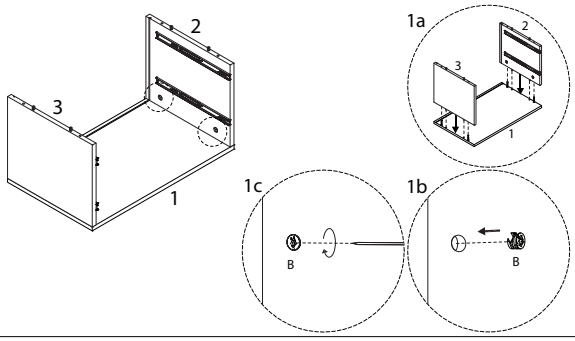

3

1	A
x 1	x 4

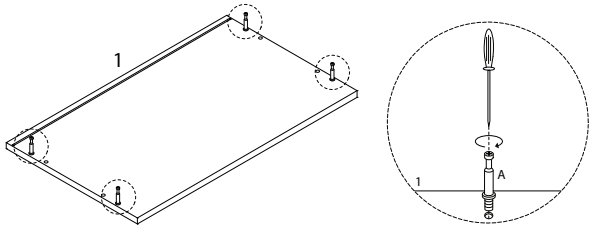

680/COVENTRY/081024/

5

5
x 1

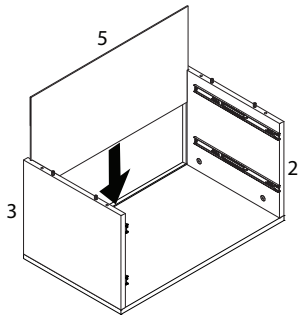

680/COVENTRY/081024/

6

4 x 1

E M4 x 35 x 4

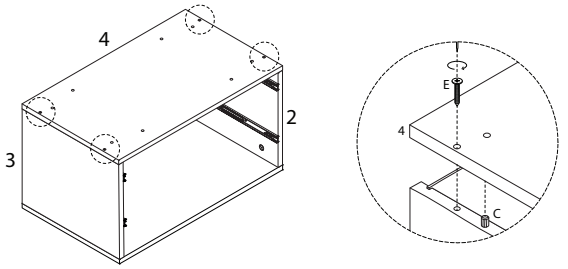

8

F M6 x 25 x 8

G x 1

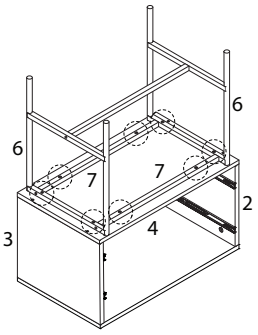

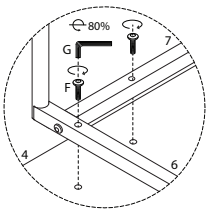

7

6 x 2

7 x 2

8 x 1

F M6 x 25 x 6

G x 1

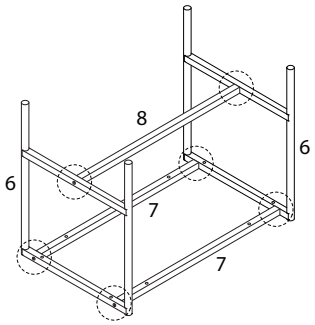

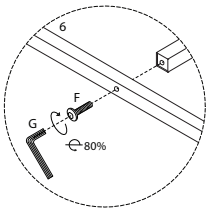

8/14

9

G x 1

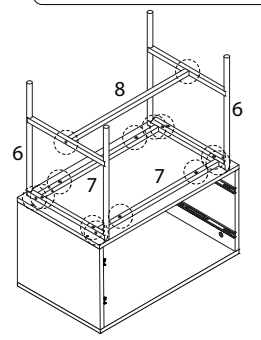

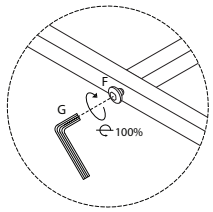

9/14

10 x 2

13 x 1

A x 4

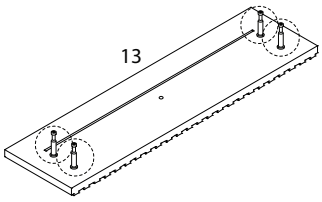

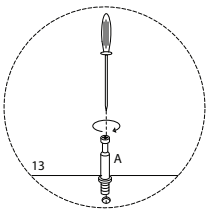

12 x 2

12 x 1

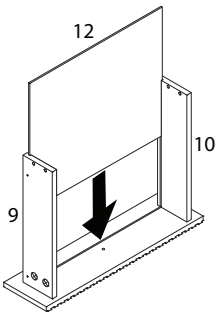

11 x 2

9 x 1

10 x 1

B x 4

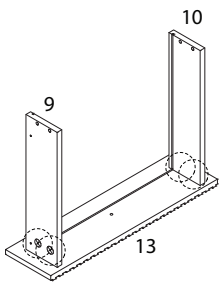

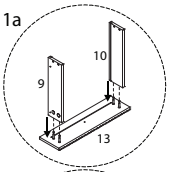

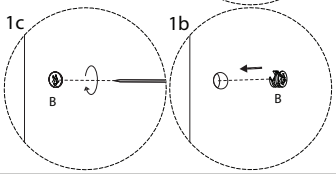

10/14

13 x 2

11 x 1

E M4 x 35 x 4

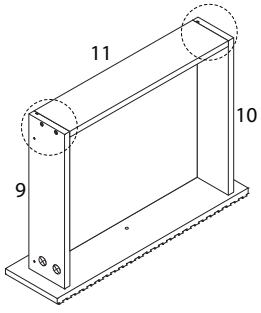

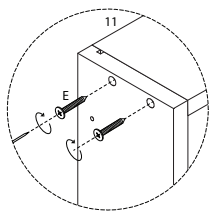

11/14

14 x 2

D	P
M3 x 12	
x 4	x 2

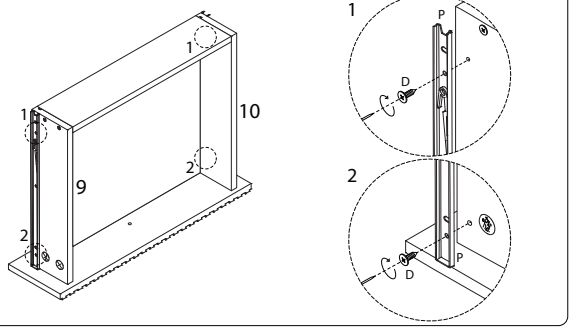

15 x 2

H	I
M4 x 20	
x 1	x 1

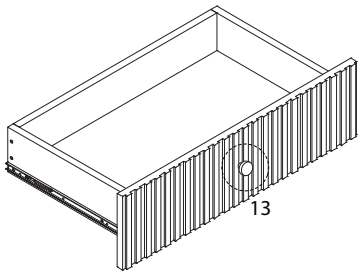

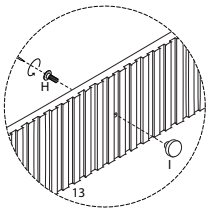

680/COVENTRY/081024/

16

M	N
M4 x 16	
x 4	x 4

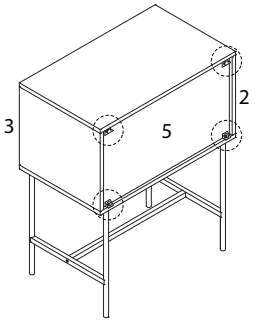

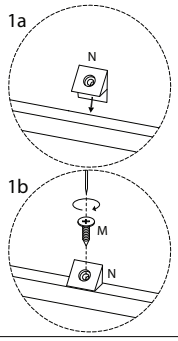

17

J	K	L
M4 x 10		
x 1	x 1	x 1

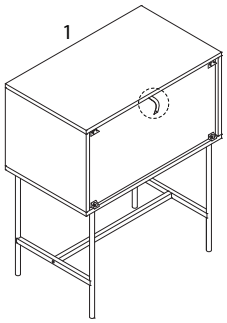

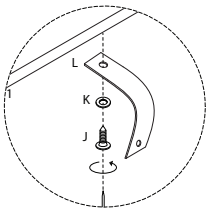

680/COVENTRY/081024/

18

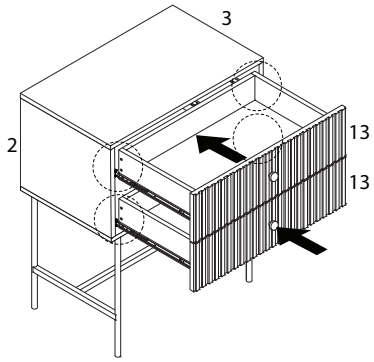

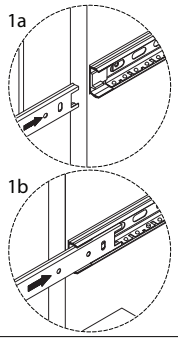

19

E	K	Q
M4 x 35		
x 1	x 1	x 1

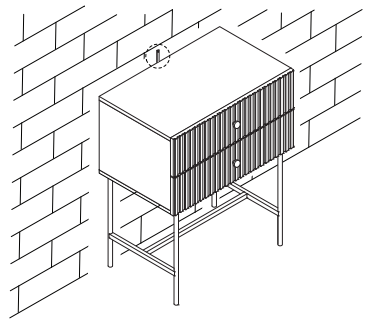

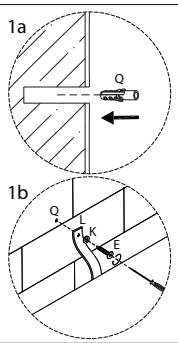

680/COVENTRY/081024/