COSTELLO

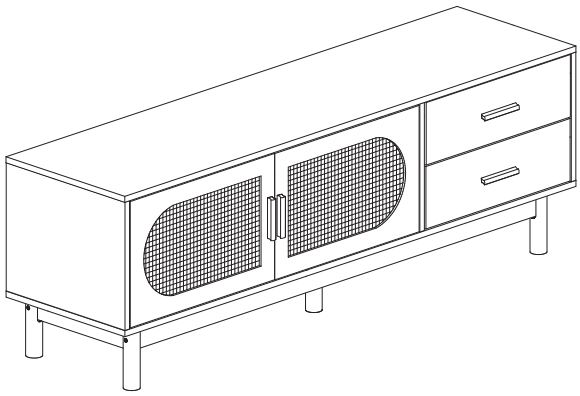

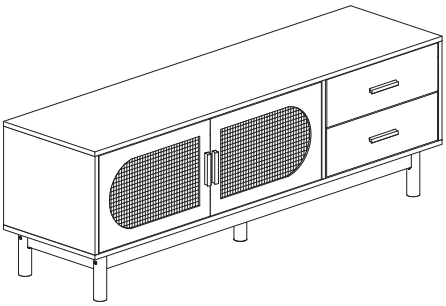

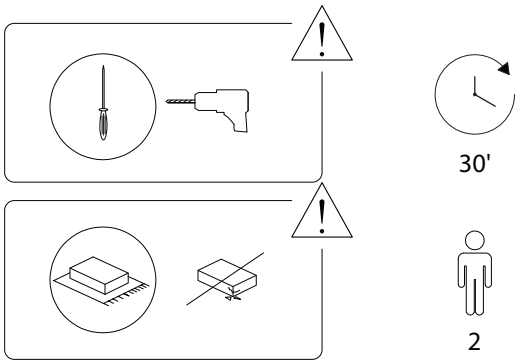
30'
2

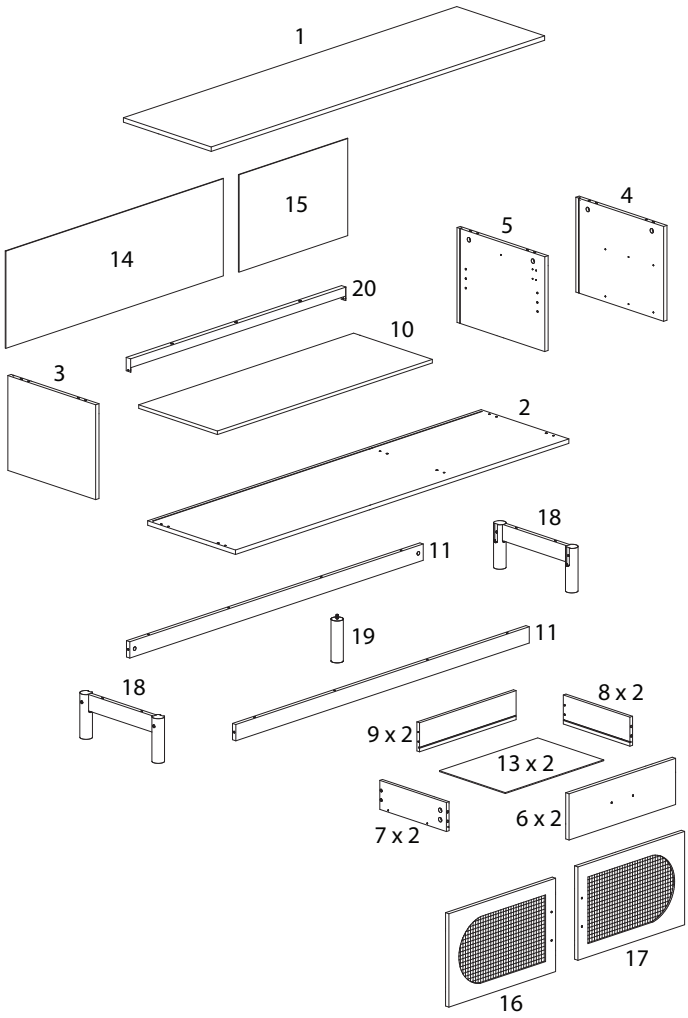
1
15
14
4
5
20
10
3
2
18
11
19
11
18
8 x 2
9 x 2
13 x 2
6 x 2
7 x 2
17
16

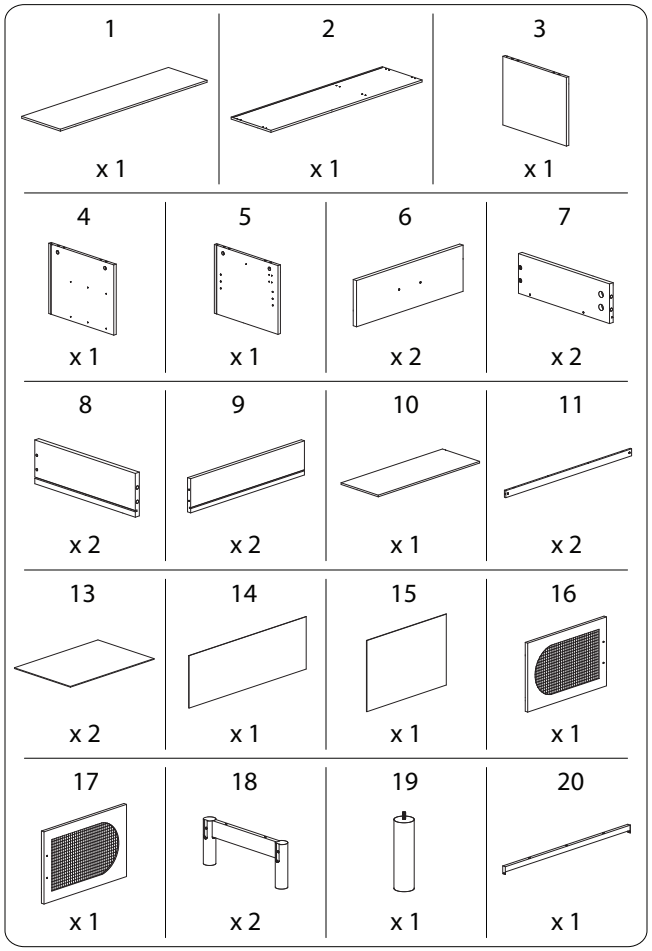
1 x 1
2 x 1
3 x 1
4 x 1
5 x 1
6 x 2
7 x 2
8 x 2
9 x 2
10 x 1
11 x 2
13 x 2
14 x 1
15 x 1
16 x 1
17 x 1
18 x 2
19 x 1
20 x 1

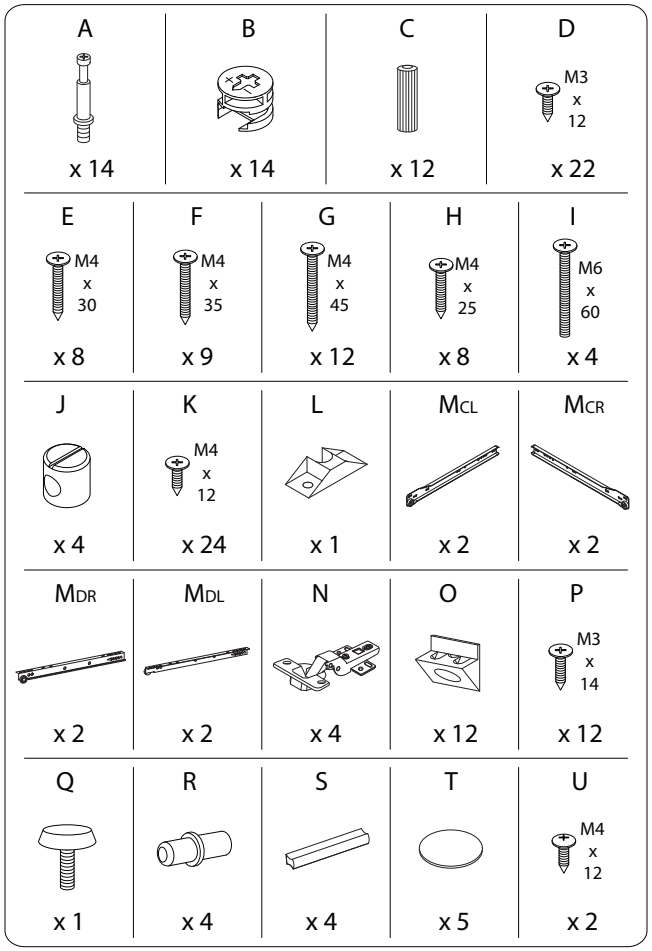
A x 14
B x 14
C x 12
D M3 x 12 x 22
E M4 x 30 x 8
F M4 x 35 x 9
G M4 x 45 x 12
H M4 x 25 x 8
I M6 x 60 x 4
J x 4
K M4 x 12 x 24
L x 1
MCL x 2
MCR x 2
MDR x 2
MDL x 2
N x 4
O x 12
P M3 x 14 x 12
Q x 1
R x 4
S x 4
T x 5
U M4 x 12 x 2

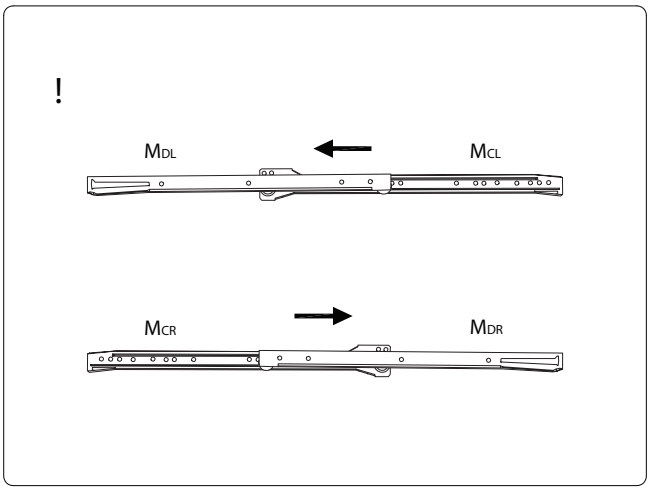
!
MDL
MCL
MCR
MDR

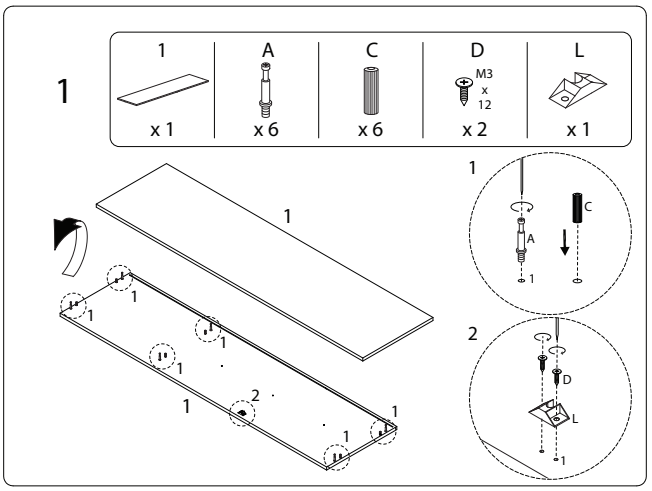
1
1 x 1
A x 6
C x 6
D M3 x 12 x 2
L x 1
1
2

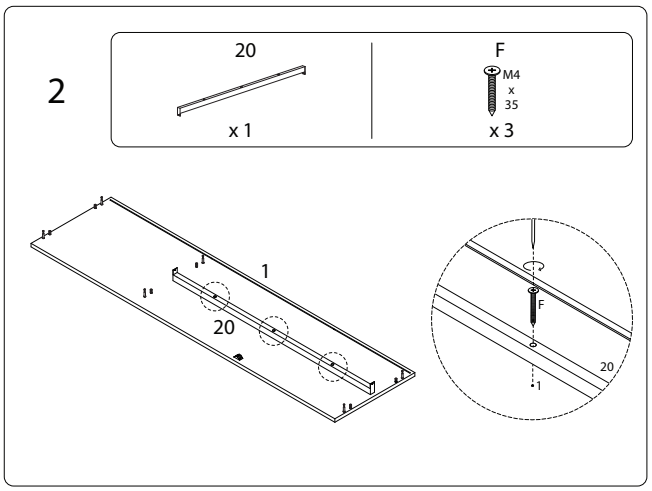
2
20 x 1
F M4 x 35 x 3
1
20
F

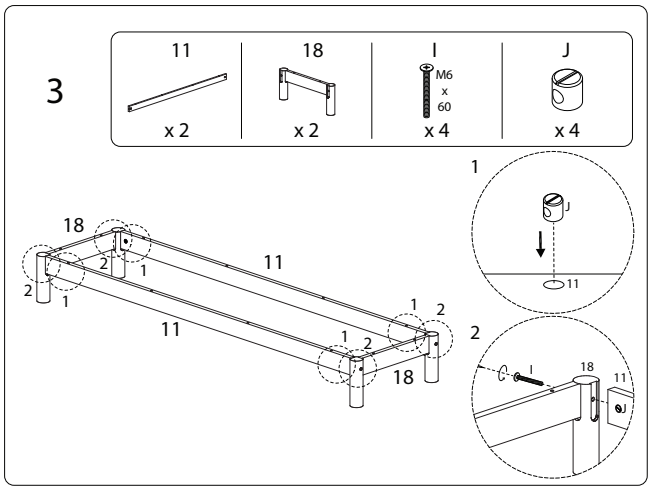
3
11 x 2
18 x 2
I M6 x 60 x 4
J x 4
18
11
1
2

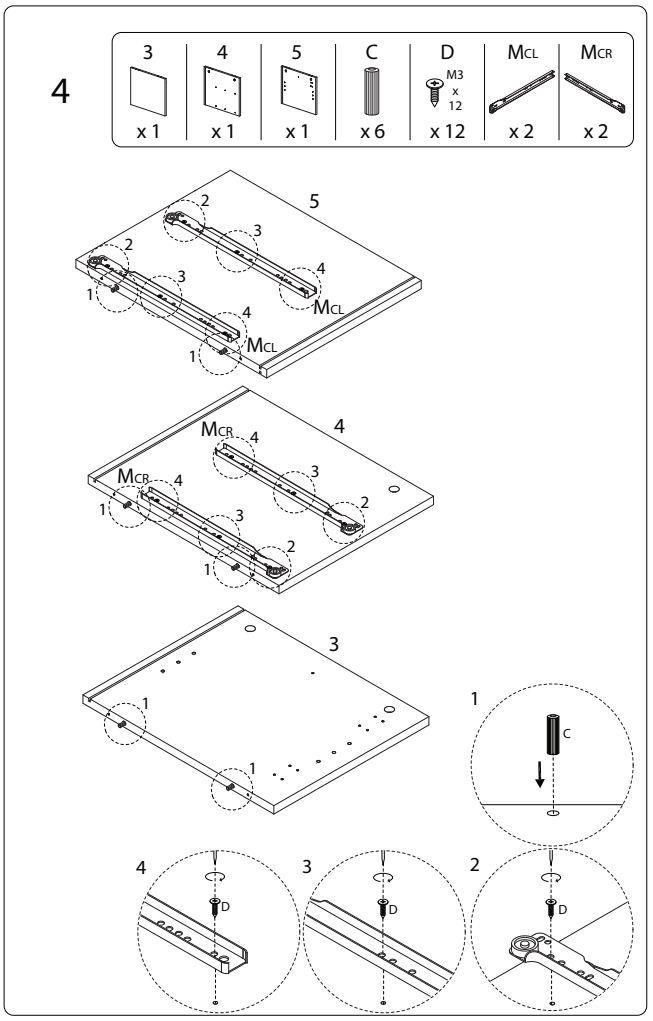
4
3 x 1
4 x 1
5 x 1
C x 6
D M3 x 12 x 12
MCL x 2
MCR x 2
5
4
3
1
2
4
3

5

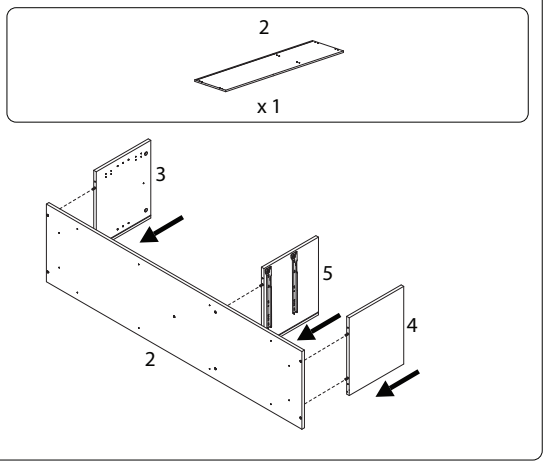

6

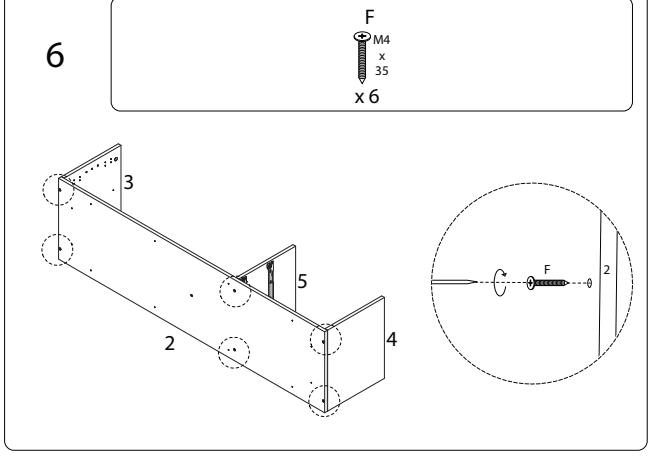

7

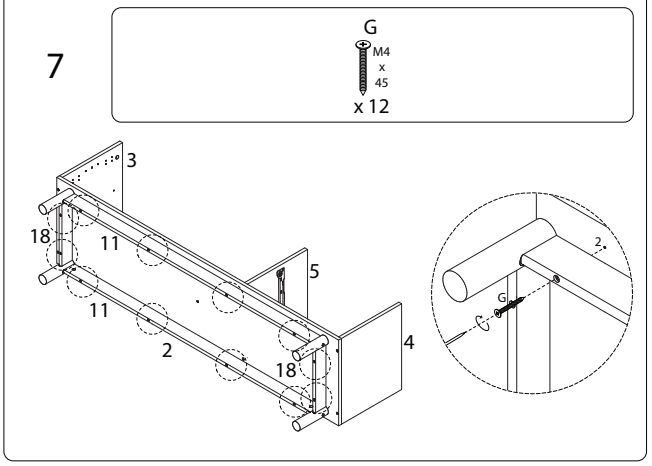

8

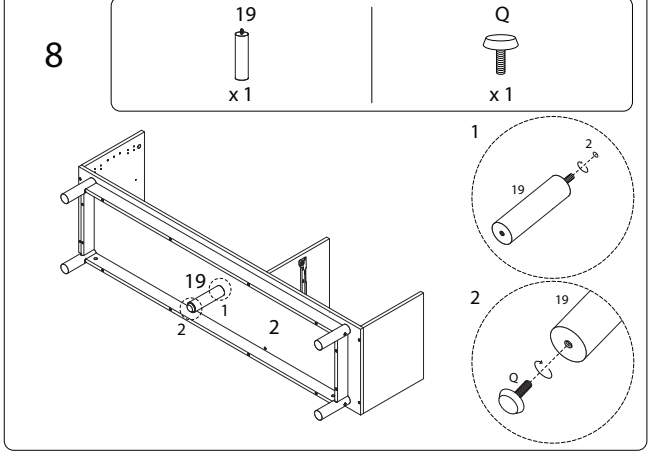

9

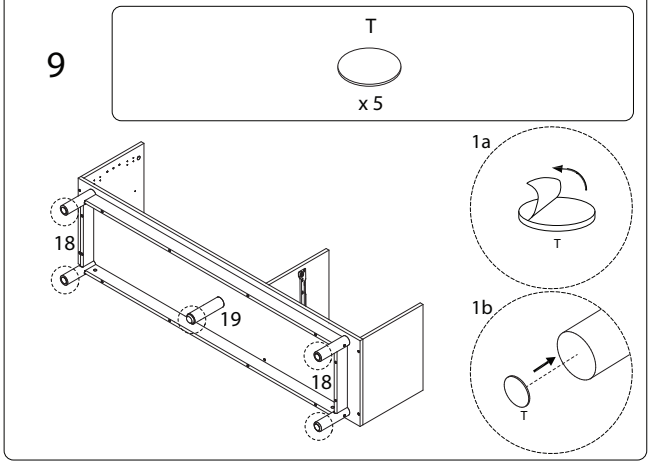

10

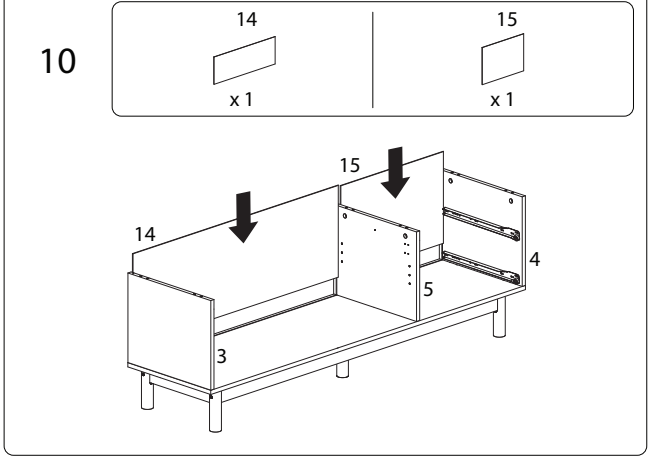

11

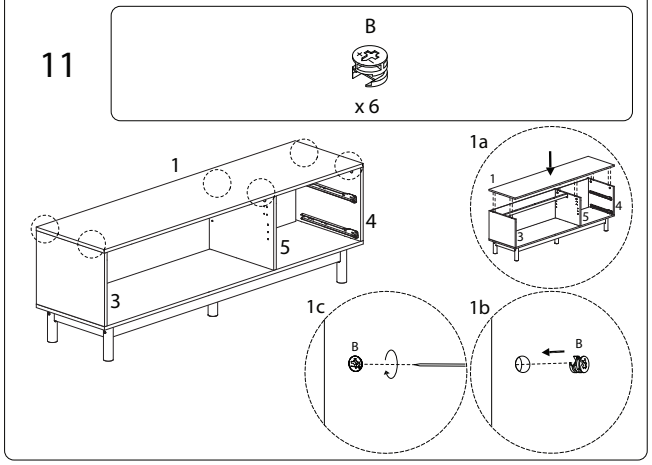

12

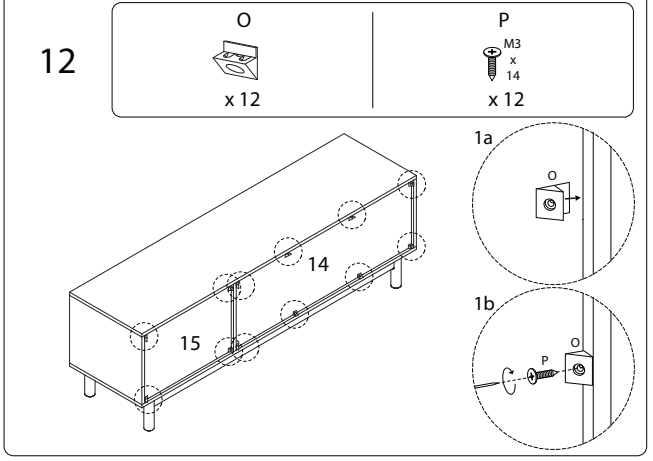

13

R	U
x 4	M4 x 12 x 2

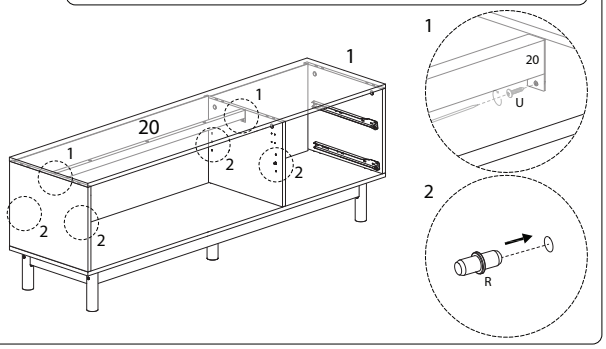

14

10
x 1

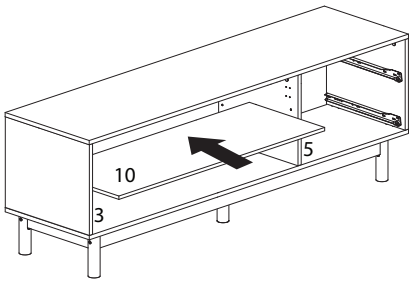

15

16	17	H	K	N	S
x 1	x 1	M4 x 25 x 4	M4 x 12 x 8	x 4	x 2

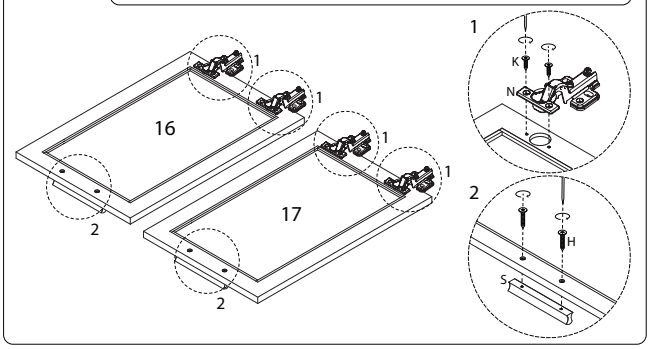

16

K
M4 x 12 x 16

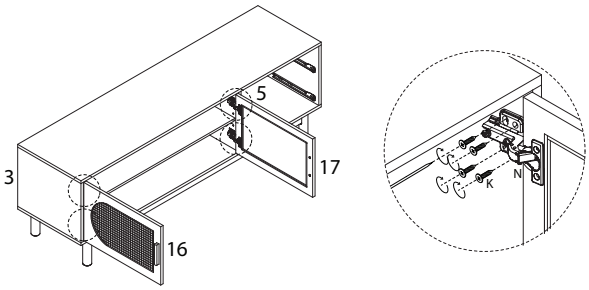

17 x 2

7	8	9	E
x 1	x 1	x 1	M4 x 30 x 4

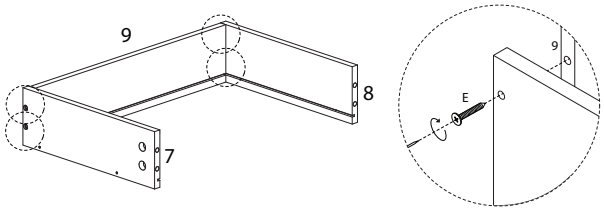

18 x 2

13
x 1

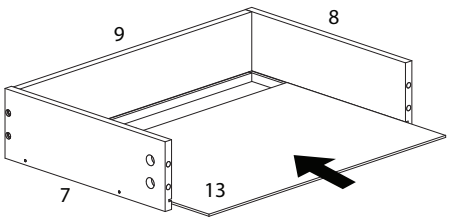

19 x 2

6	A	H	S
x 1	x 4	M4 x 25 x 2	x 1

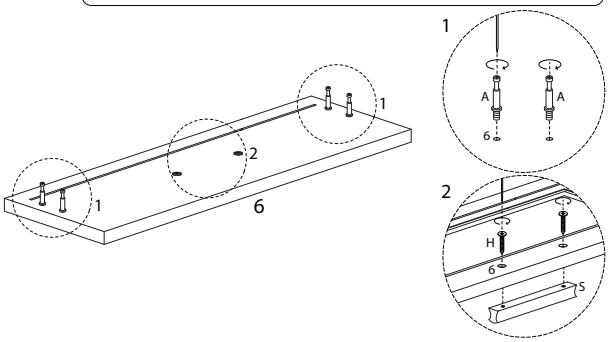

20 x 2

B
x 4

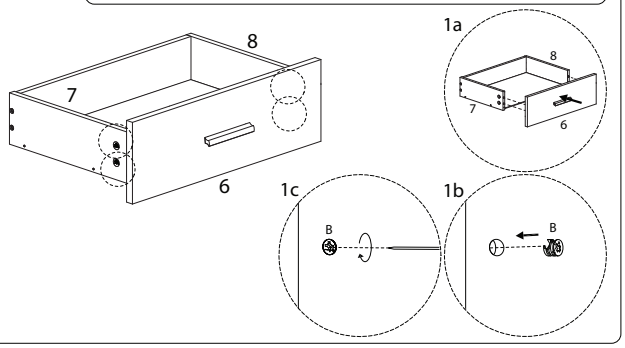

21 x 2

D	MDR	MDL
M3 x 12		
x 4	x 1	x 1

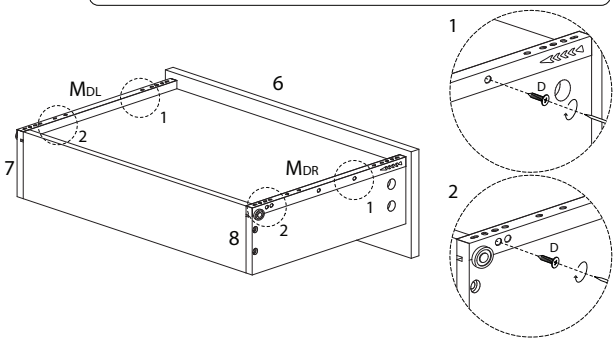

22

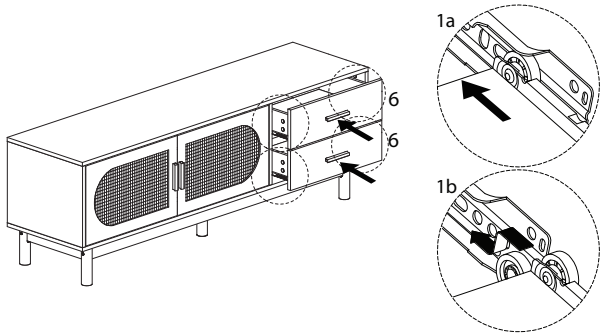

23

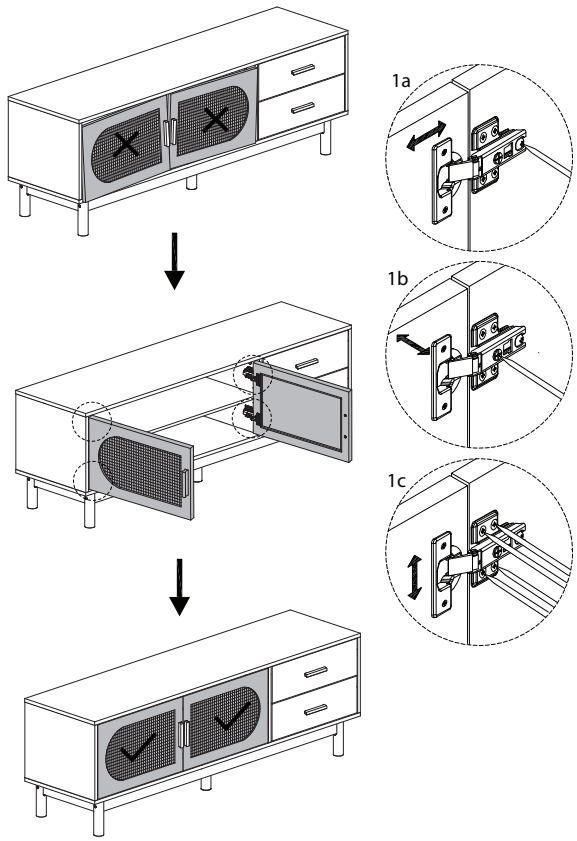

1658/COSTELLO/020226/