ALTONA





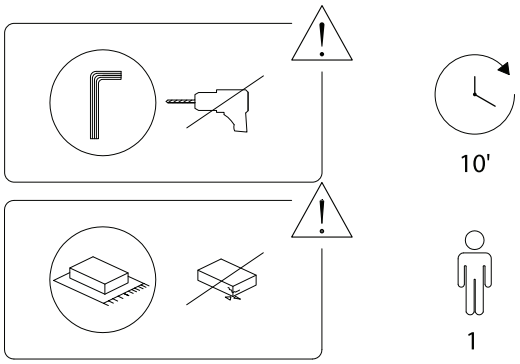

1/5

2452/ALTONA/110625/

A	B	C	D
x 1	x 1	x 1	x 1

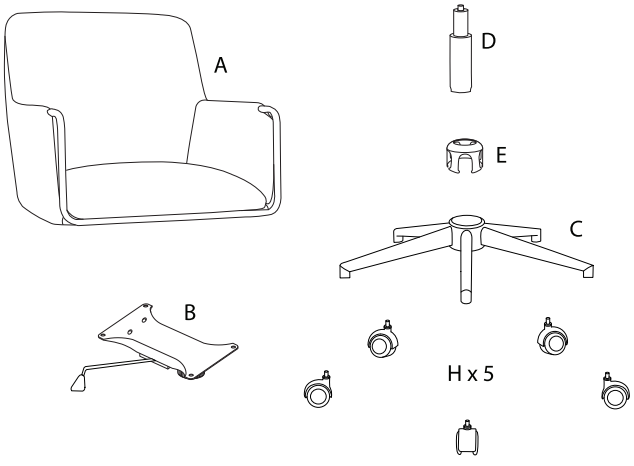

E	F	G	H
x 1	x 1	M6 x 20 x 4	x 5

2/5

2452/ALTONA/110625/

1

C	H
x 1	x 5

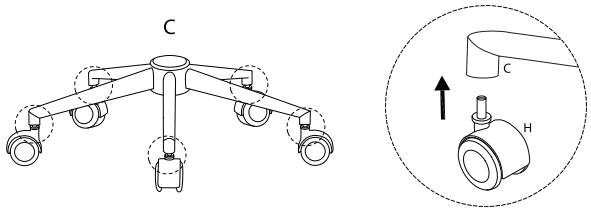

2

D	E
x 1	x 1

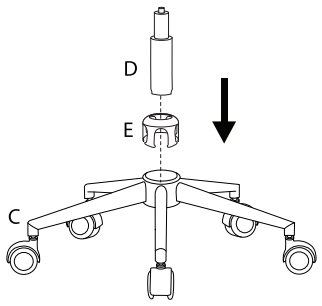

3/5

2452/ALTONA/110625/

3

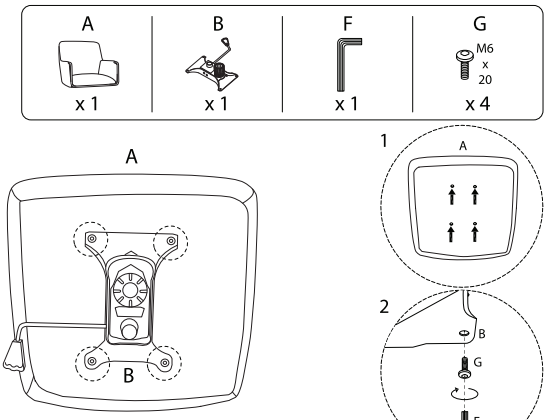

!

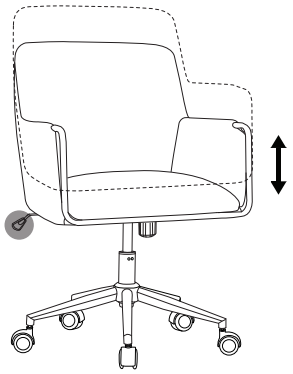

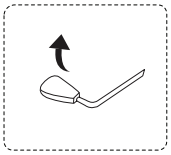

4

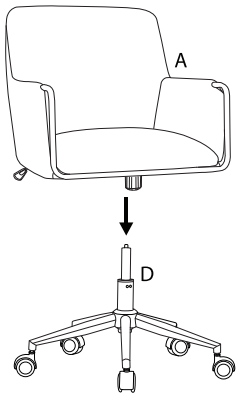

2452/ALTONA/110625/