HOUSTON

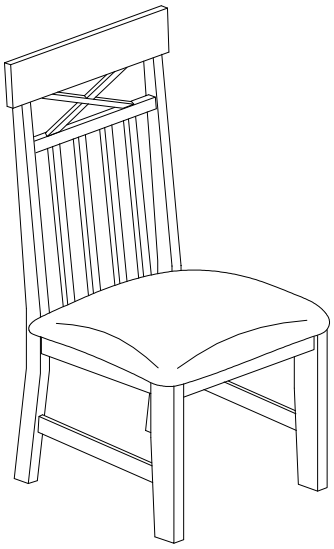

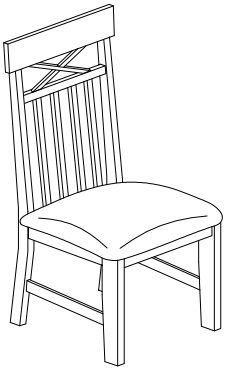

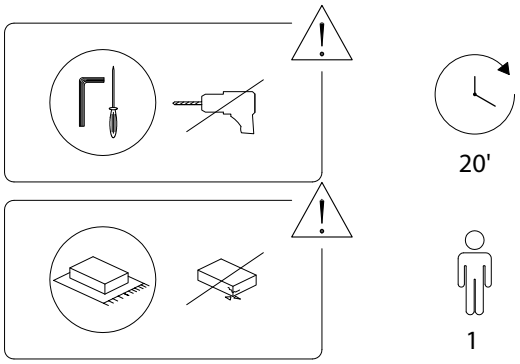

1/4

1	2	3	4	5
			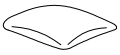	
x 1	x 1	x 2	x 1	x 2

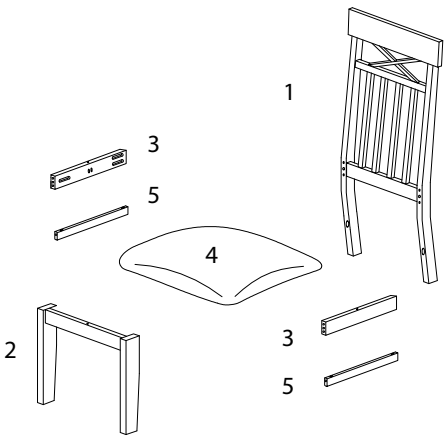

A	B	C	D	E
 M6 x 50		 M4 x 32		
x 6	x 6	x 7	x 1	x 6

2/4

1 x 2

3	E
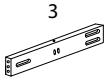	
x 1	x 3

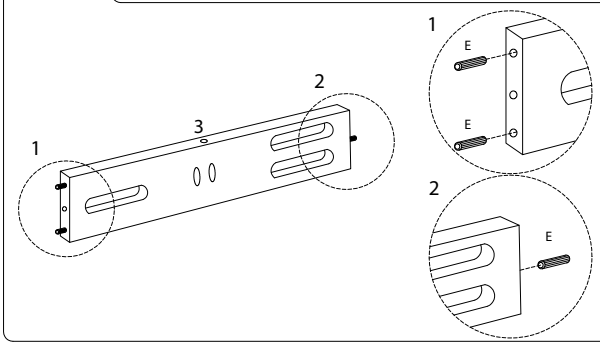

2

2	A	B	D
	 M6 x 50		
x 1	x 2	x 2	x 1

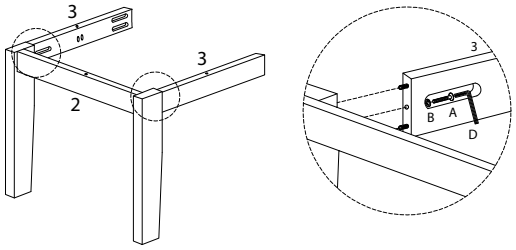

3/4

722/HOUSTON.CH/280225/

3

1	5	A	B	D
x 1	x 2	M6 x 50 x 4	x 4	x 1

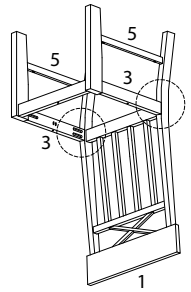

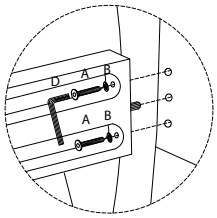

4

4	C
x 1	M4 x 32 x 7

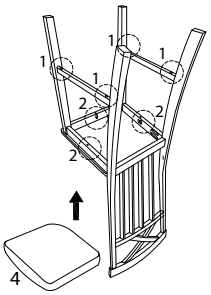

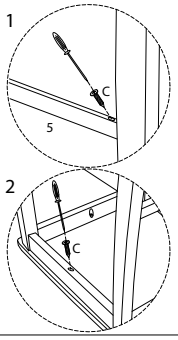

722/HOUSTON.CH/280225/