GEORGIA

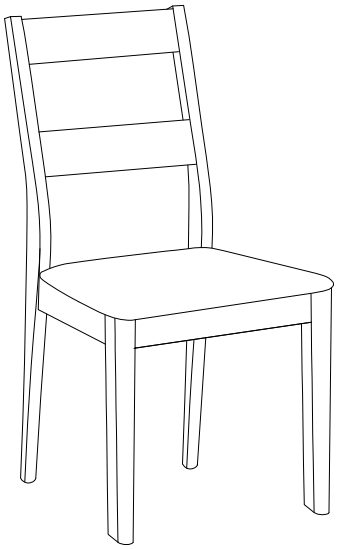

1/5

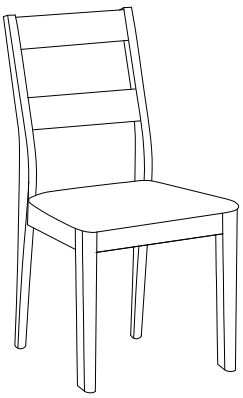

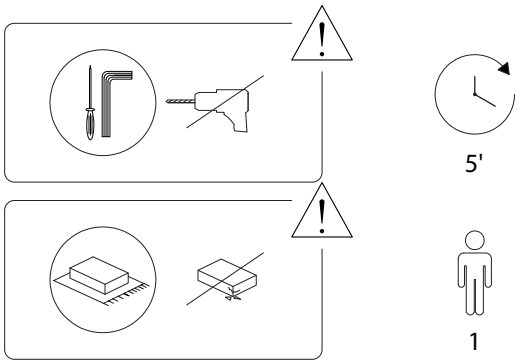

2/5

722/GEORGIA/100826/

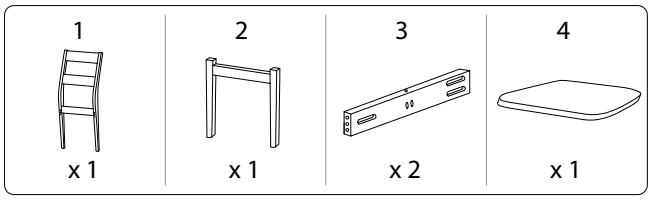

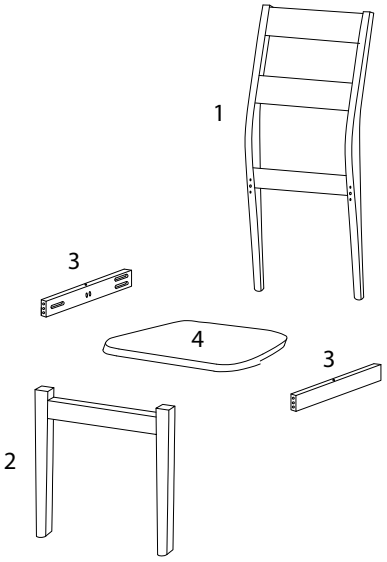

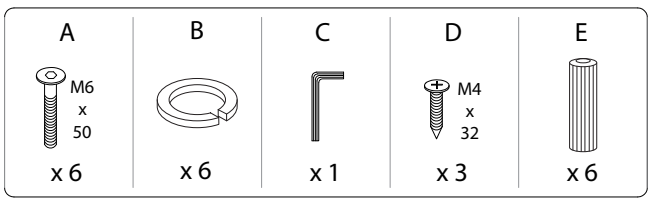

3/5

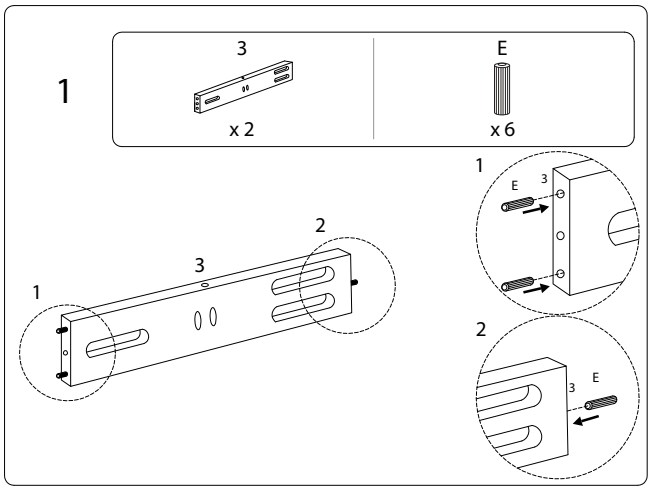

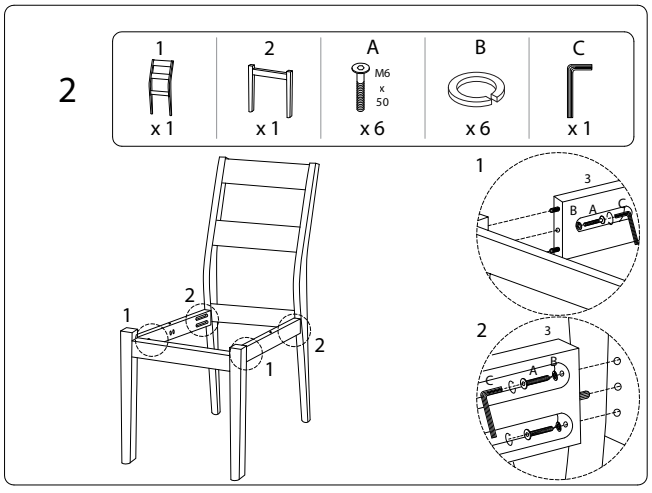

4/5

722/GEORGIA/100826/

3

4	D
	 M4 x 32
x 1	x 3

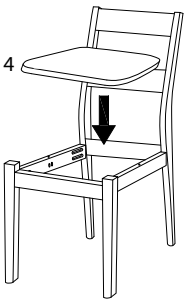

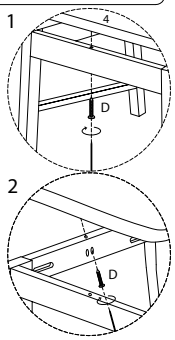

722/GEORGIA/100826/