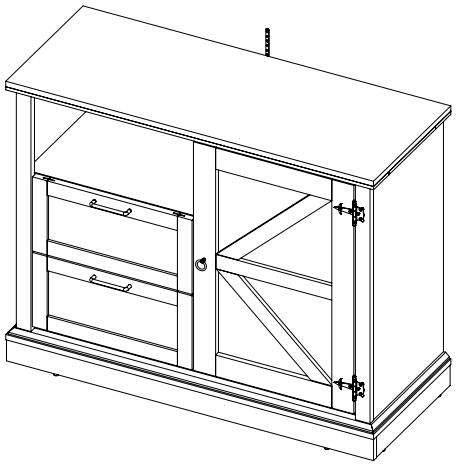

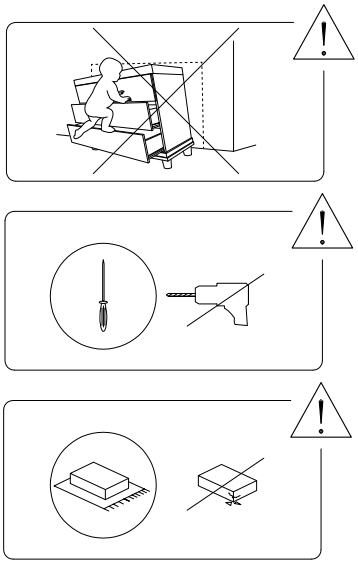

45′

1

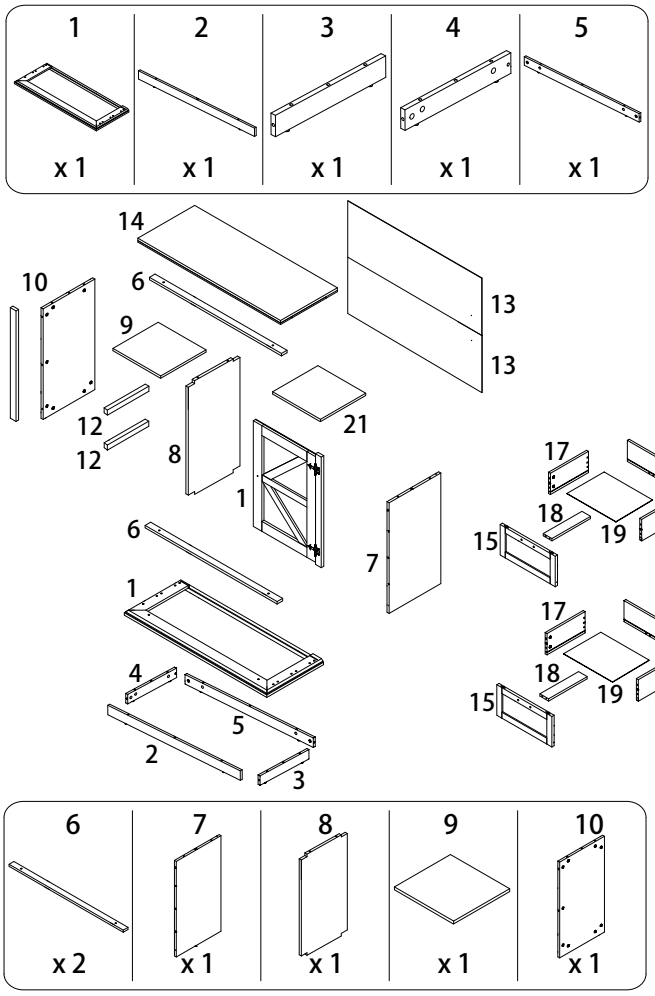
1
x 1
2
x 1
3
x 1
4
x 1
5
x 1
14
6
10
9
11
12
12
8
1
21
13
13
6
1
4
5
2
3
7
17
20
18
19
16
15
17
20
18
19
16
15
6
x 2
7
x 1
8
x 1
9
x 1
10
x 1

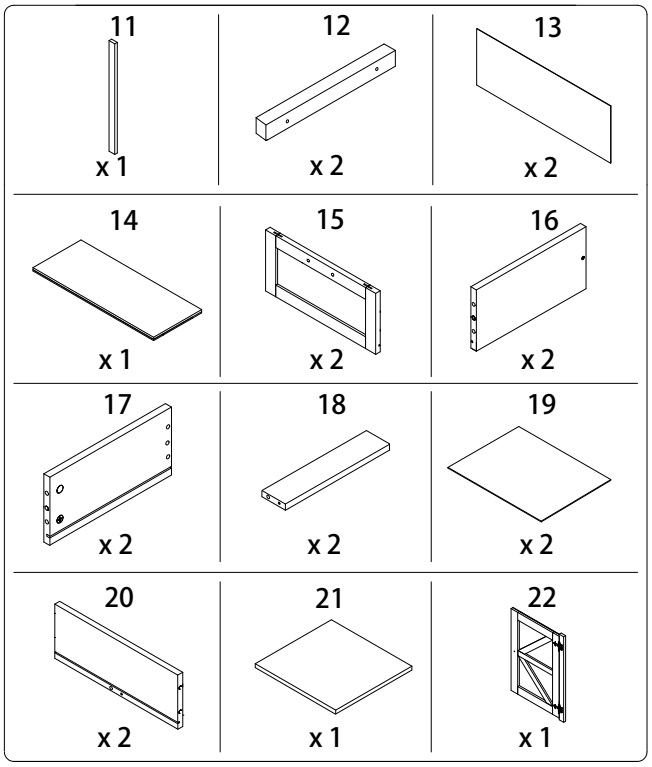
11
x 1
12
x 2
13
x 2
14
x 1
15
x 2
16
x 2
17
x 2
18
x 2
19
x 2
20
x 2
21
x 1
22
x 1

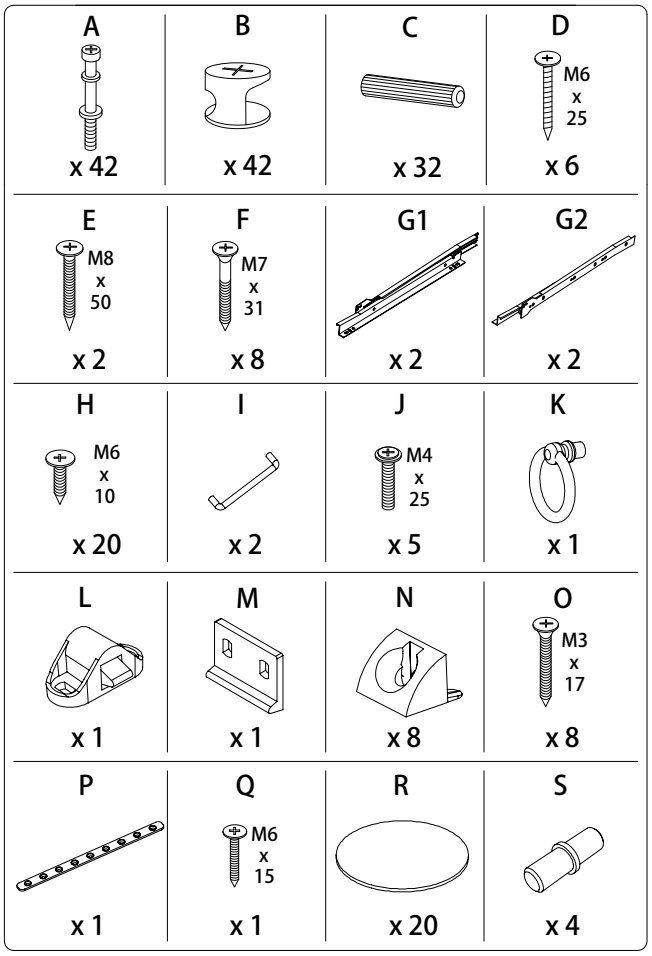
A
x 42
B
x 42
C
x 32
D
M6
x
25
x 6
E
M8
x
50
x 2
F
M7
x
31
x 8
G1
x 2
G2
x 2
H
M6
x
10
x 20
I
x 2
J
M4
x
25
x 5
K
x 1
L
x 1
M
x 1
N
x 8
O
M3
x
17
x 8
P
x 1
Q
M6
x
15
x 1
R
x 20
S
x 4

1

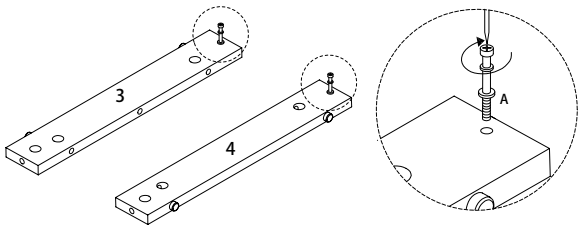
3
x 1
4
x 1
A
x 2
3
4
A

2

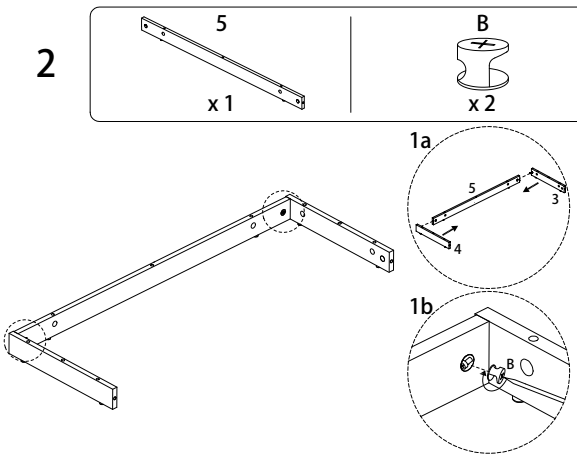
5
x 1
B
x 2
1a
5
3
4
1b
B

3

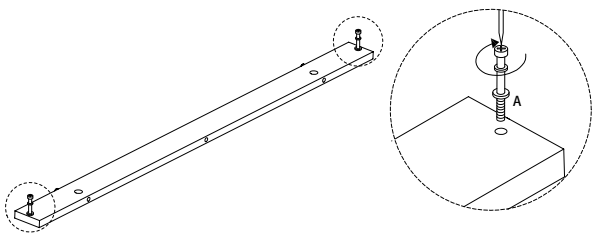
2
x 1
A
x 2
A

4

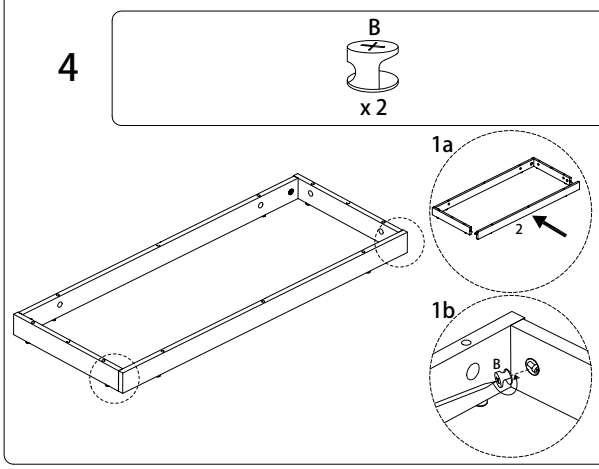
B
x 2
1a
2
1b
B

5

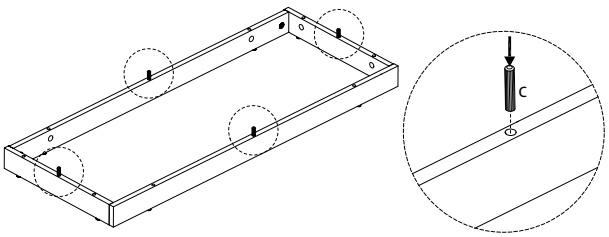
C
x 4
C

6

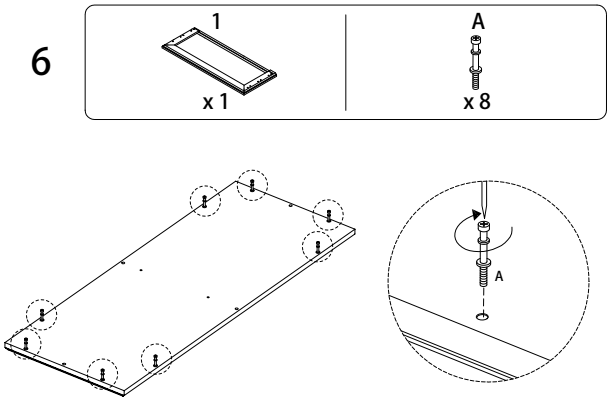
1
x 1
A
x 8
A

7

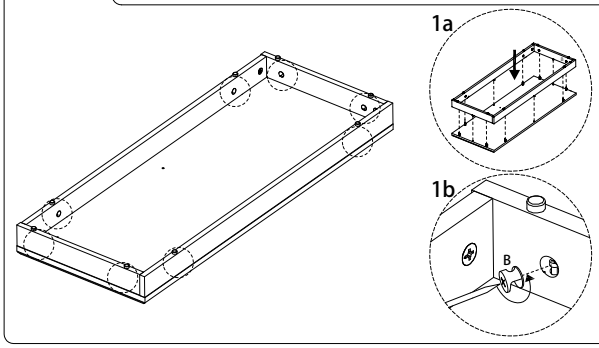
B
x 8
1a
1b
B

8

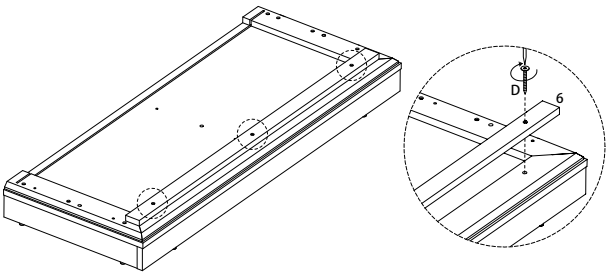
6
x 1
D
M6
x
25
x 2
D
6

9

A	C
x 4	x 2

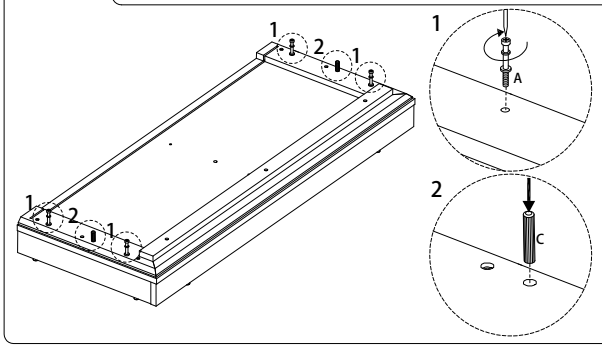

10

7	B
x 1	x 2

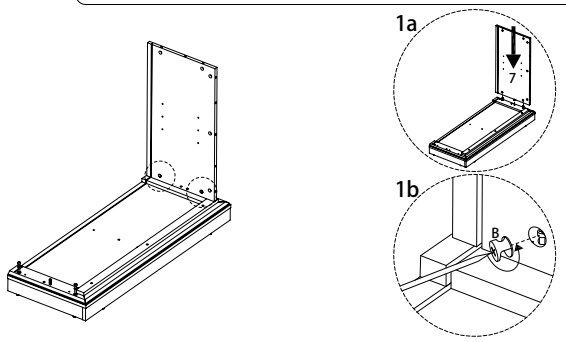

11

8	A	G1	H
x 1	x 2	x 2	M6 x 10 x 4

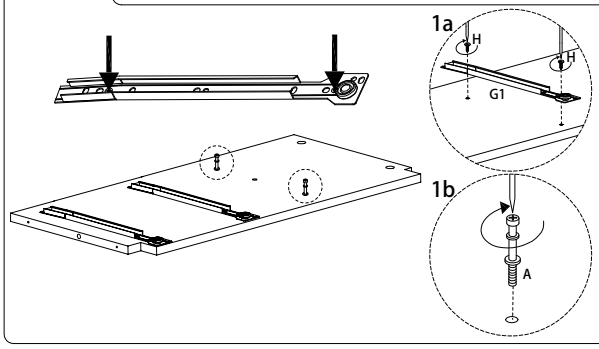

12

10	A
x 1	x 2

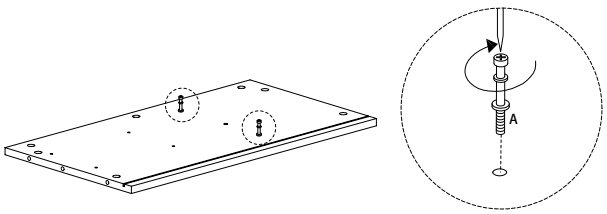

13

9	B
x 1	x 4

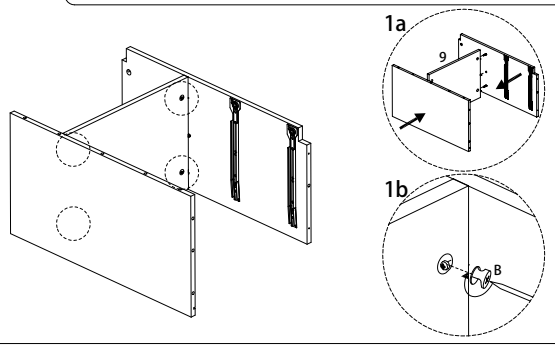

14

E
M6 x 60 x 2

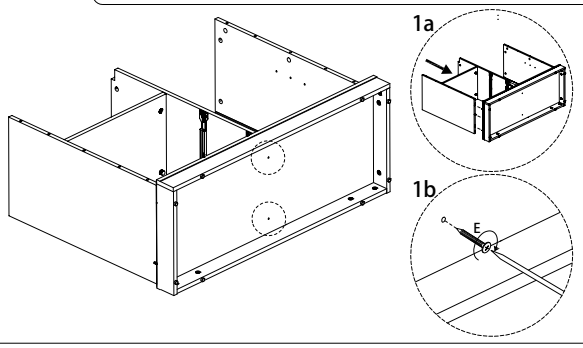

15

B	H	M
x 2	M6 x 10 x 2	x 1

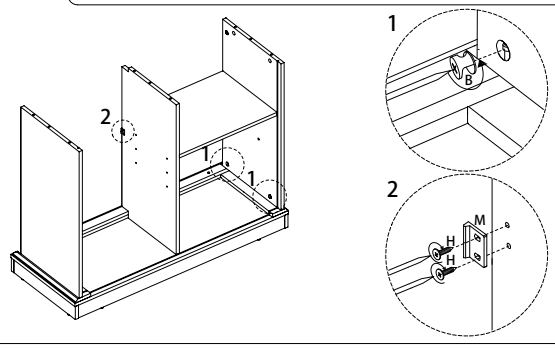

16

C
x 7

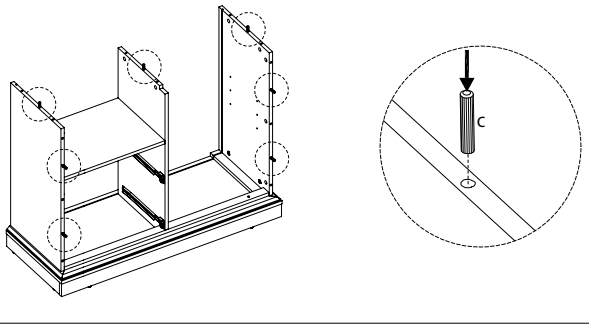

17

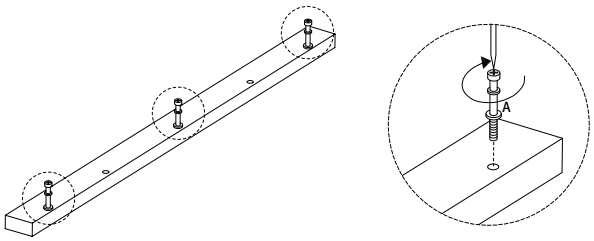

18

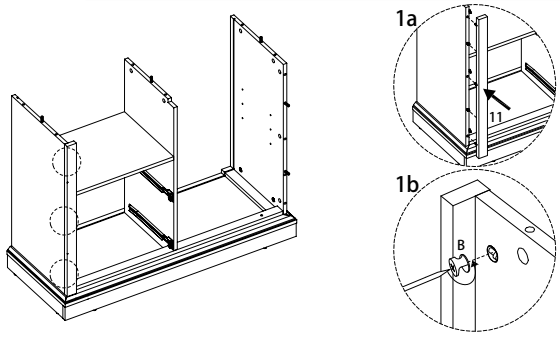

19

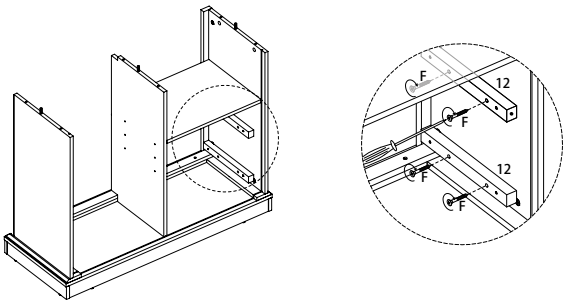

20

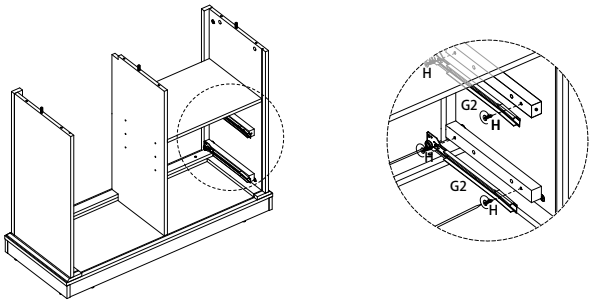

21

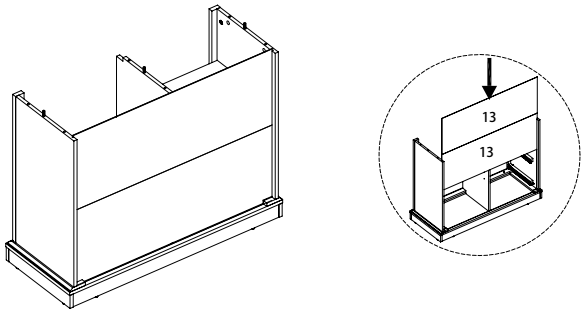

22

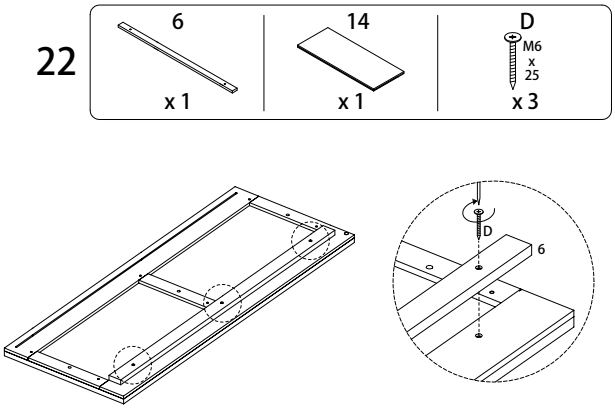

23

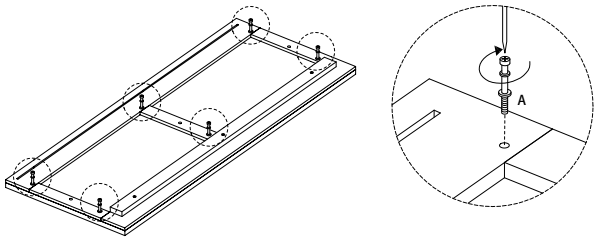

24

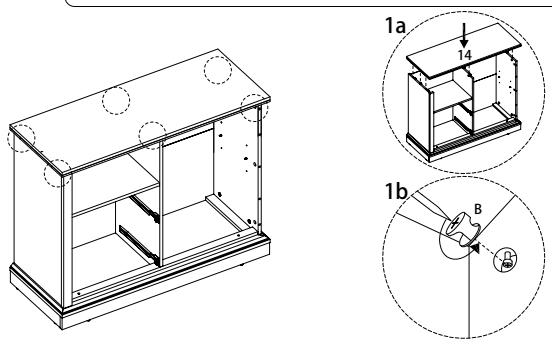

25 x2

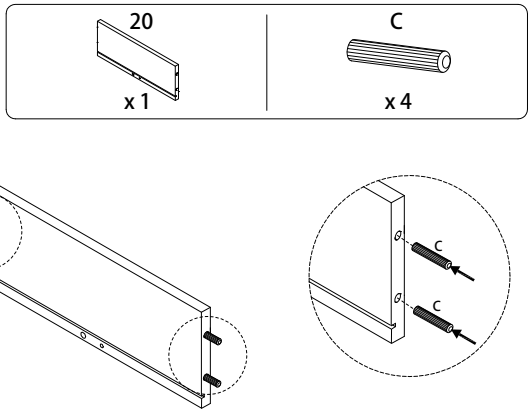

26 x2

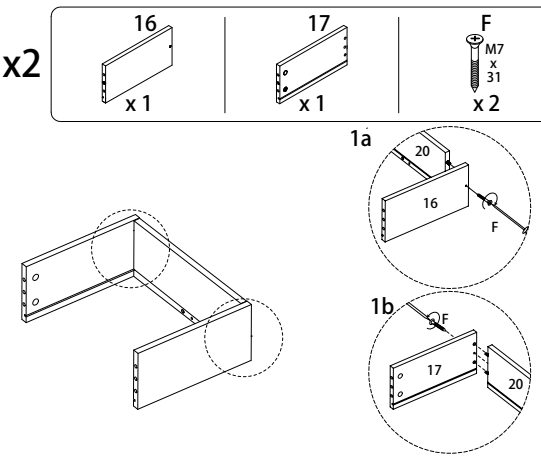

27 x2

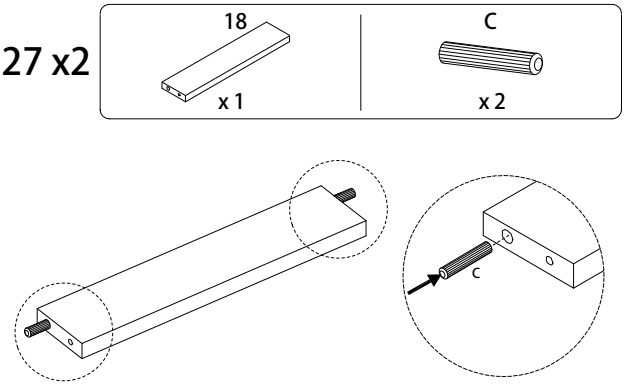

28 x2

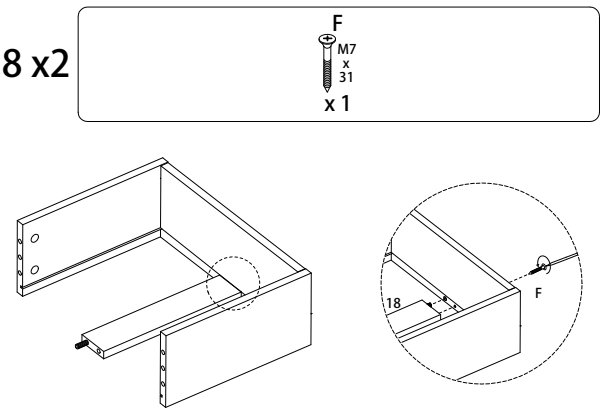

29 x2

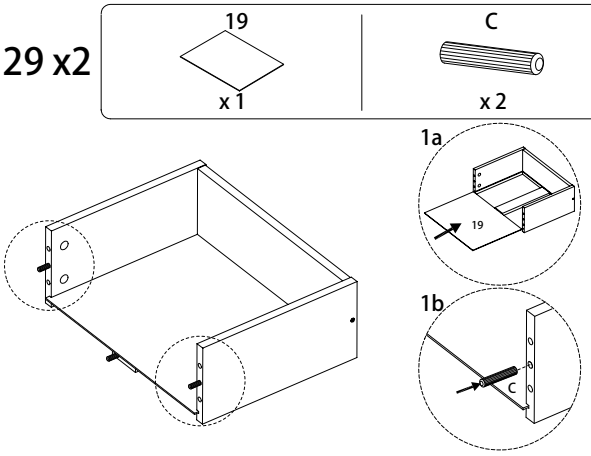

30 x2

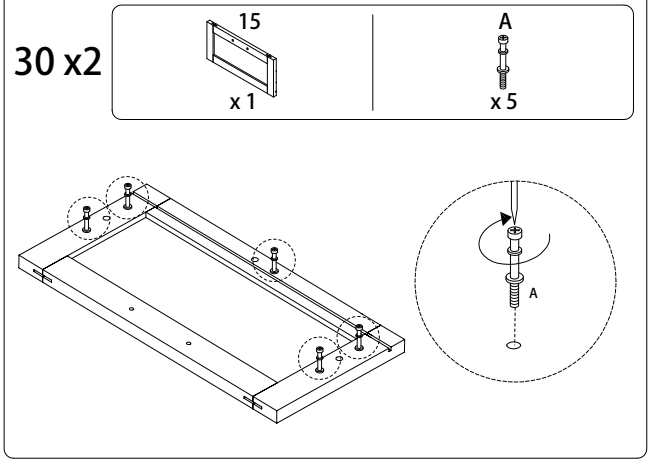

31 x2

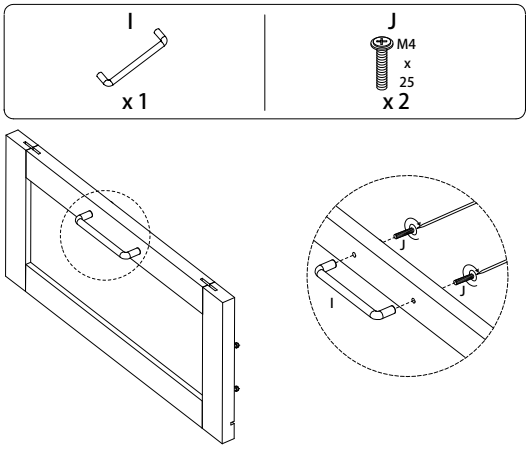

32 x2

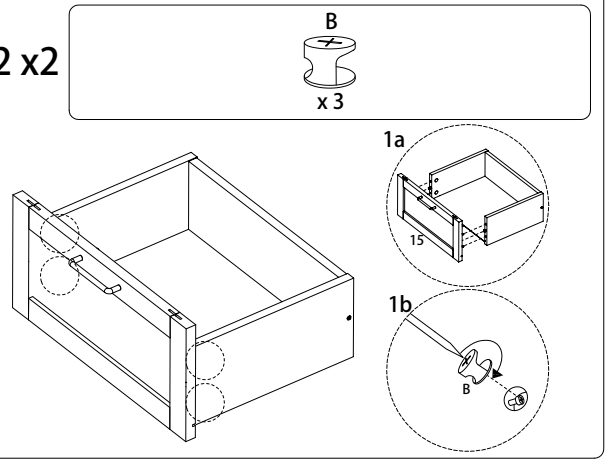

33 x2

G1	G2	H
x 1	x 1	M6 x 10 x 4

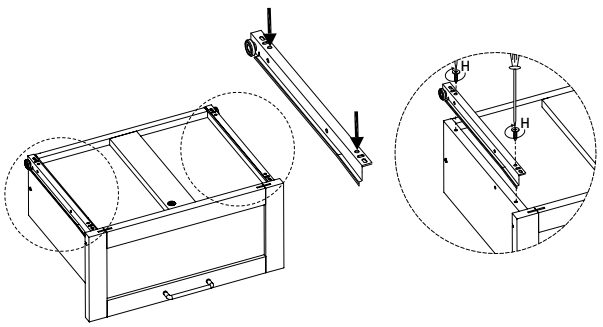

35 x 2

R
x 4

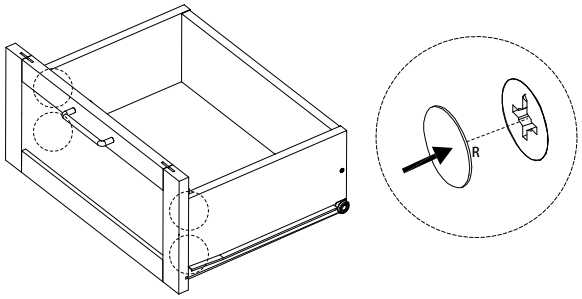

34

R
x 1

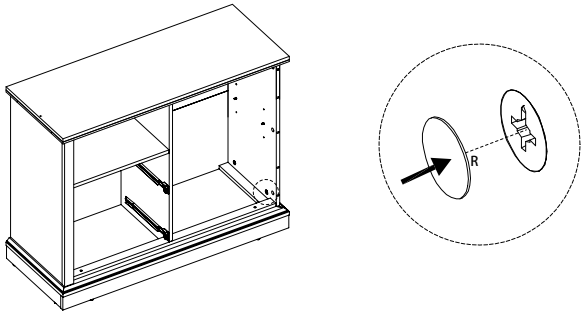

36

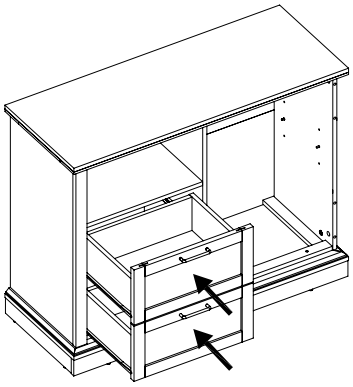

37

S	21
x 4	x 1

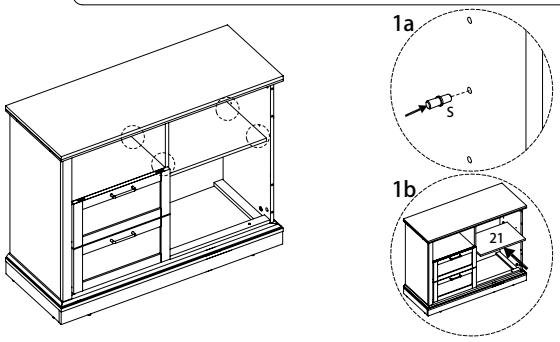

39

22	A	H	L
x 1	x 3	M6 x 10 x 2	x 1

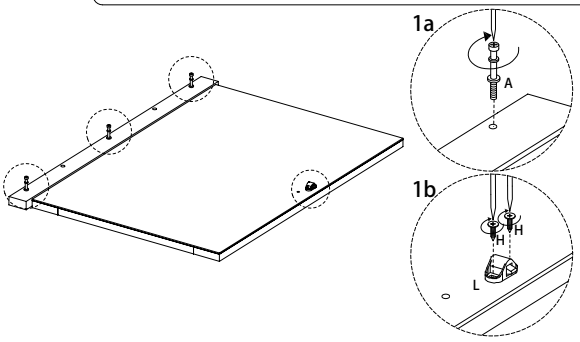

38

N	O
x 8	M3 x 17 x 8

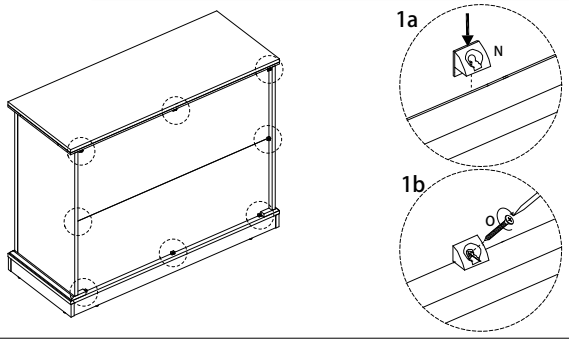

40

B
x 3

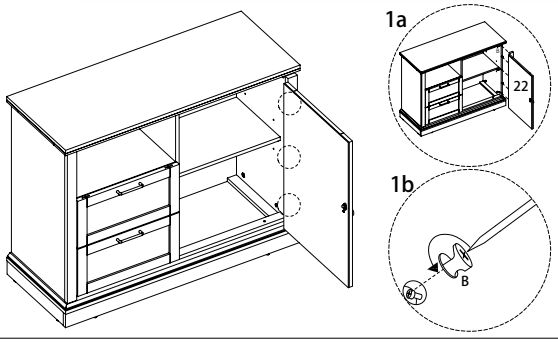

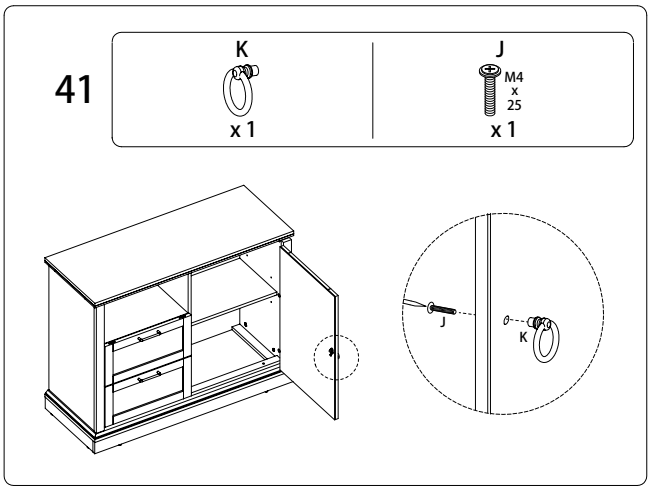
41
K
x 1
J
M4
x
25
x 1
J
K

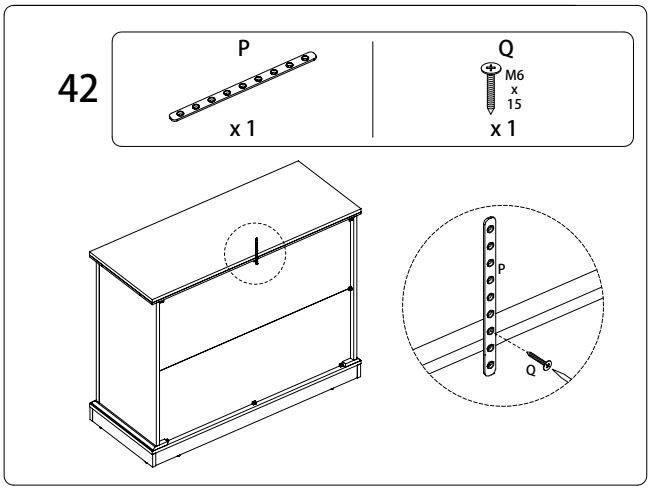
42
P
x 1
Q
M6
x
15
x 1
P
Q

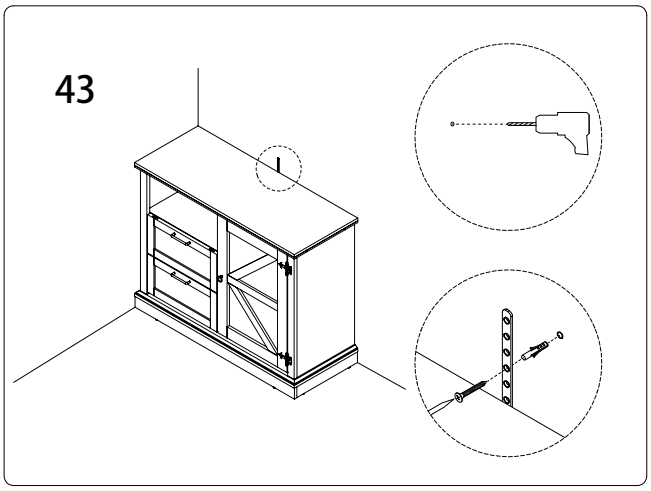
43
I