MADIDI

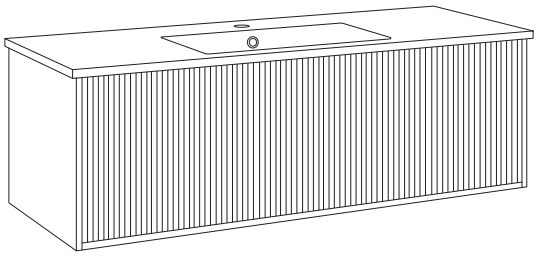

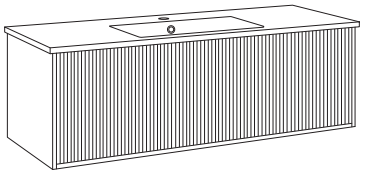

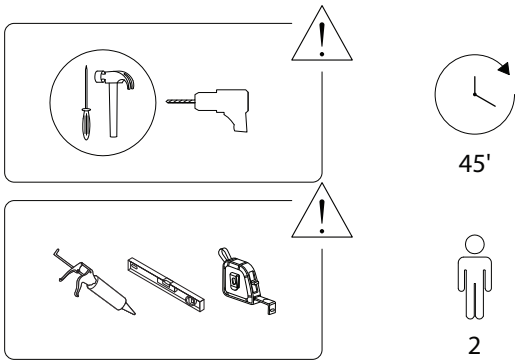
45'
2

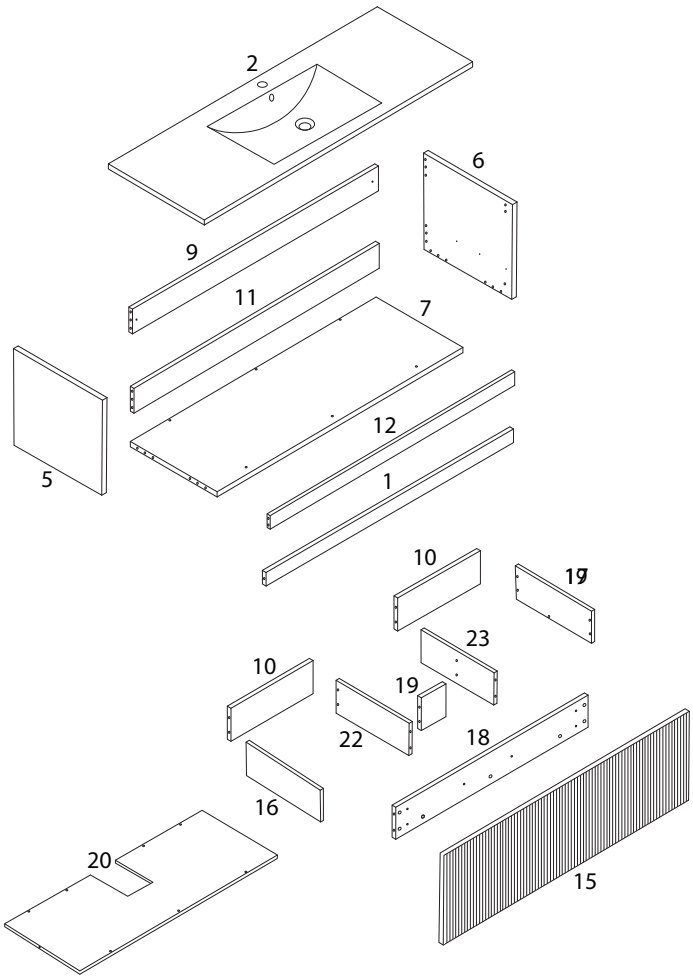
2
6
9
11
7
12
5
1
10
17
23
10
19
22
18
16
20
15

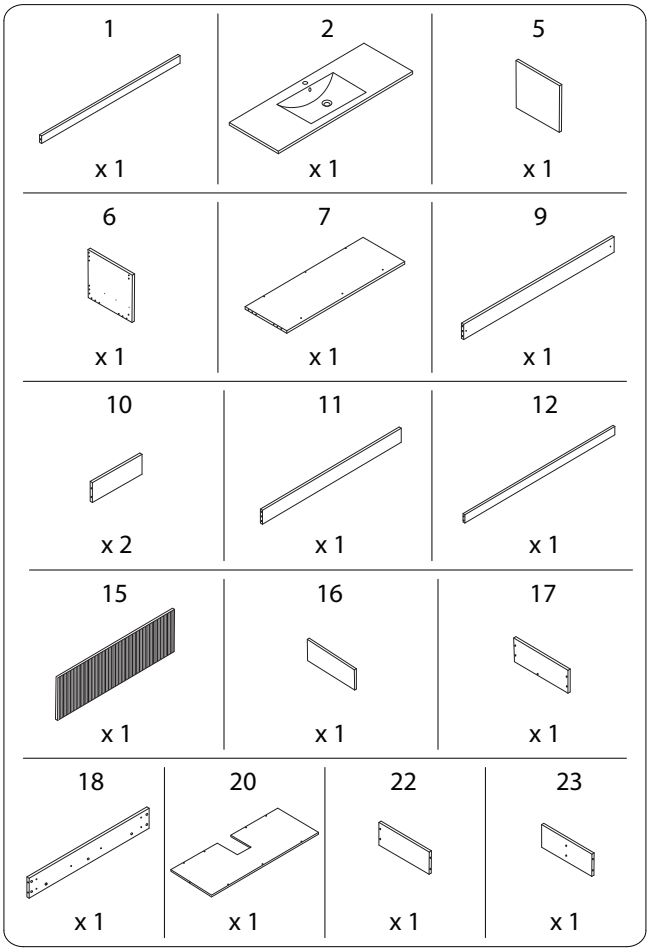
1
x 1
2
x 1
5
x 1
6
x 1
7
x 1
9
x 1
10
x 2
11
x 1
12
x 1
15
x 1
16
x 1
17
x 1
18
x 1
20
x 1
22
x 1
23
x 1

N1	N2	N4
x 53	x 53	x 12
N7L	**N7R**	**N10**
x 1	x 1	M4 x 14 x 24
N11	**N12**	**N13A**
M4 x 25 x 4	M6 x 25 x 2	x 2
N13B	**N13C**	
M6 x 70 x 2	x 2	

1

5	6	7	N1
x 1	x 1	x 1	x 24

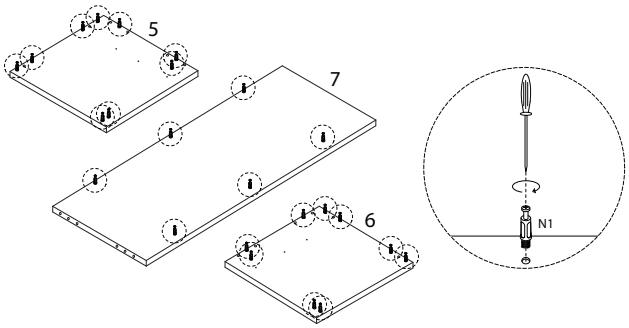

2

9	11	N4
x 1	x 1	x 12

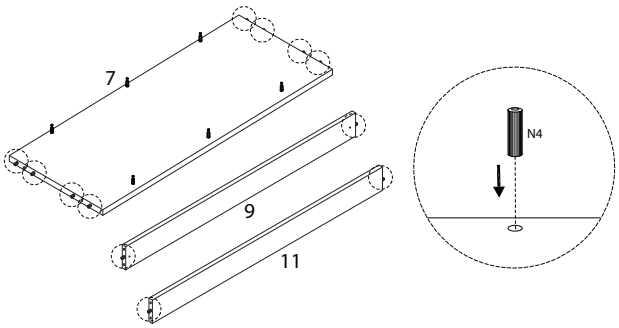

3

1	N2
x 1	x 6

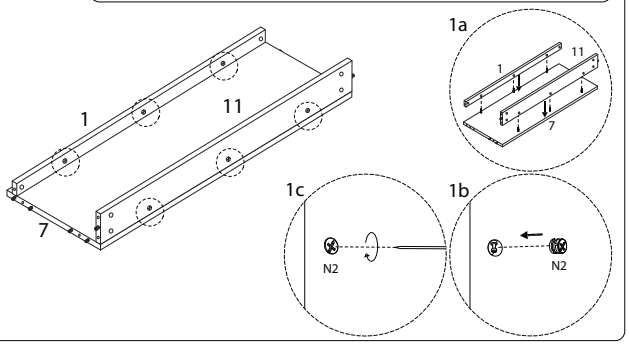

4

12	N2
x 1	x 9

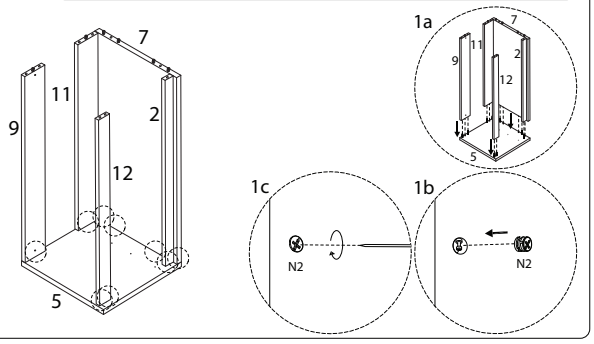

5

N2
x 9

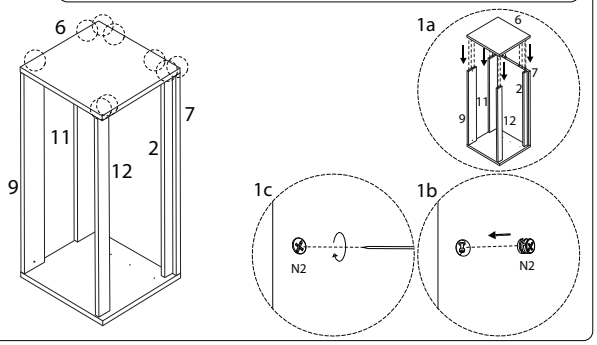

6

N7R	N10
x 1	M4 x 14 x 3

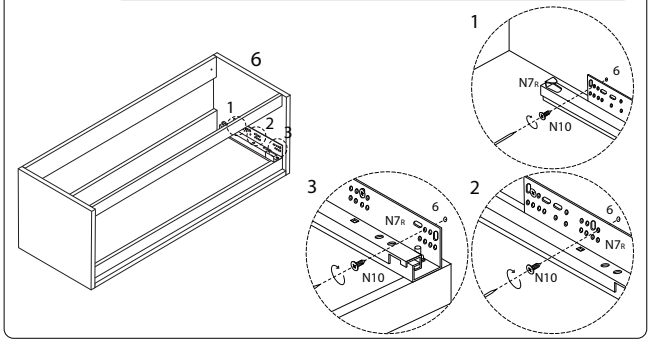

7

N7L	N10
x 1	x 3

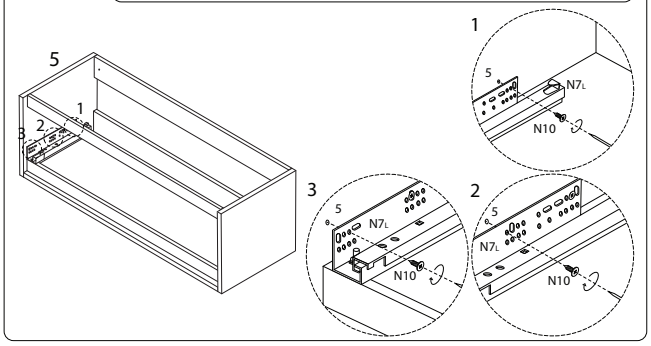

8

16	17	18	20	22	23	N1
x 1	x 1	x 1	x 1	x 1	x 1	x 29

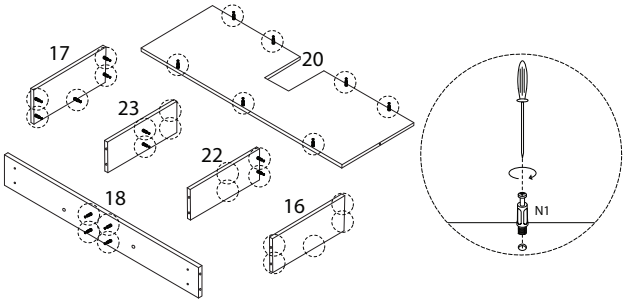

9

19	N2
x 1	x 4

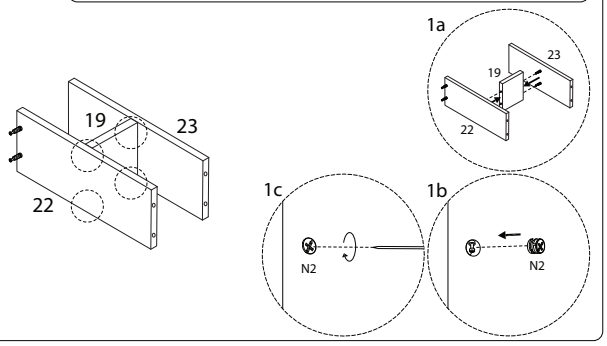

10

10	N2
x 2	x 8

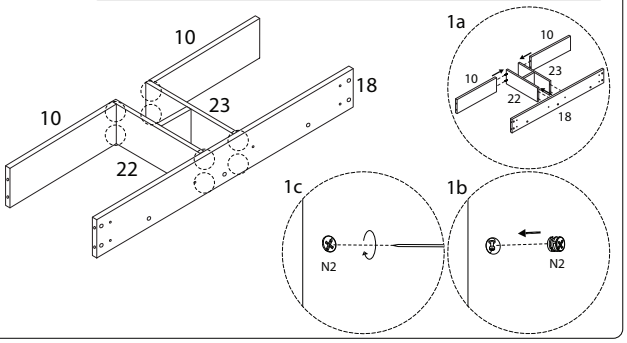

11

N2
x 4

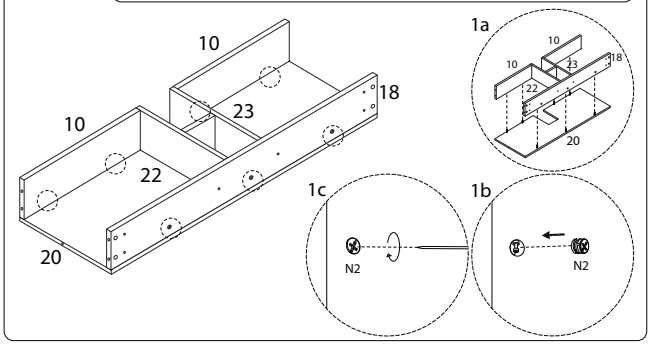

12

N2
x 10

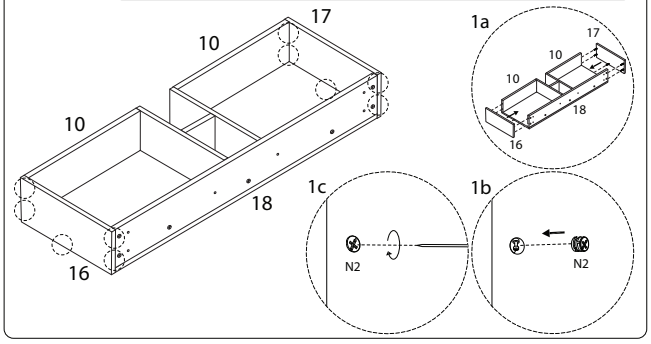

13

15	N12
x 1	x 2

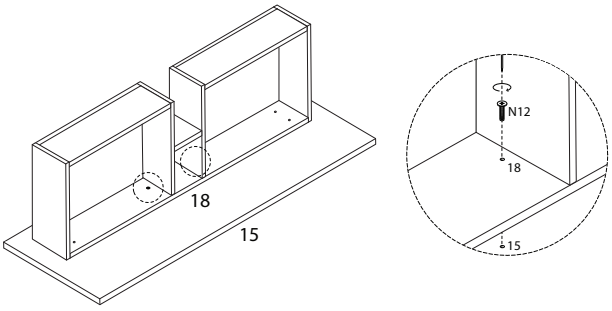

14

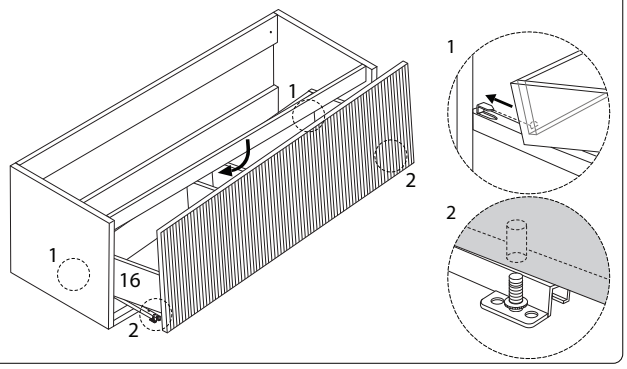

15

N10
M4 x 14
x 2

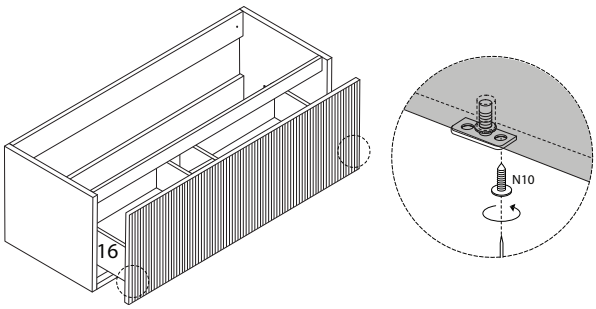

16

N11
M4 x 25
x 4

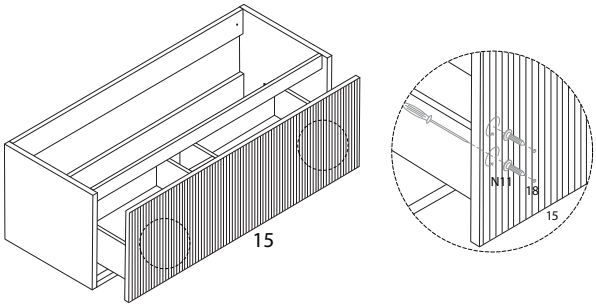

17

N10
M4 x 14
x 16

N13A
x 2

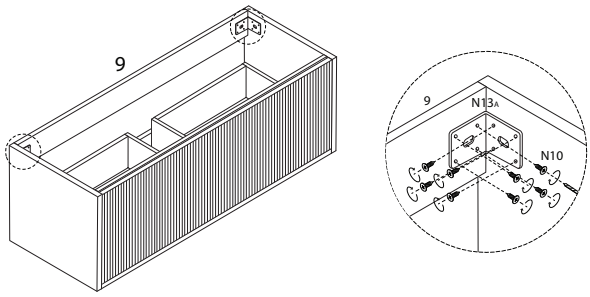

18

N13B
M6 x 70
x 2

N13C
x 2

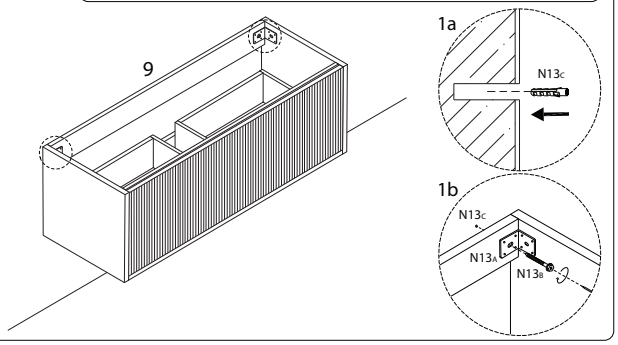

19

2
x 1

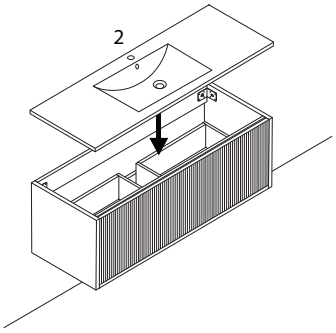

!

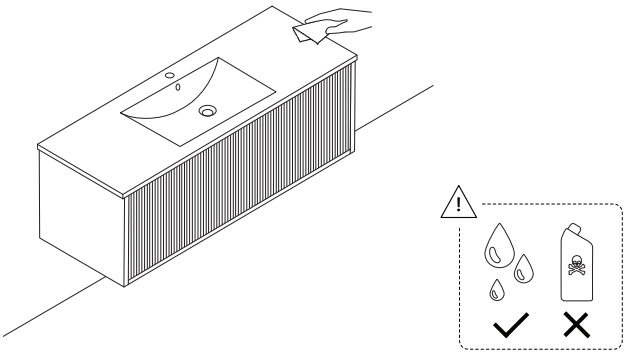
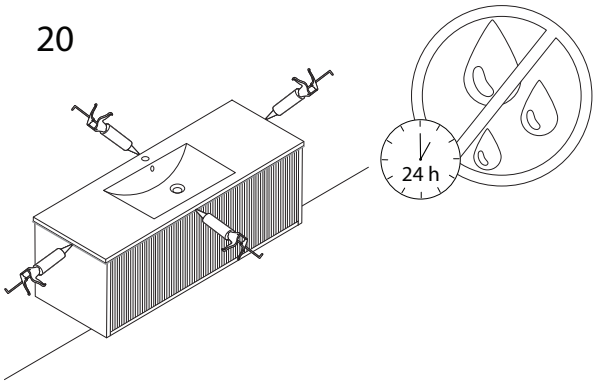
20