NOYON

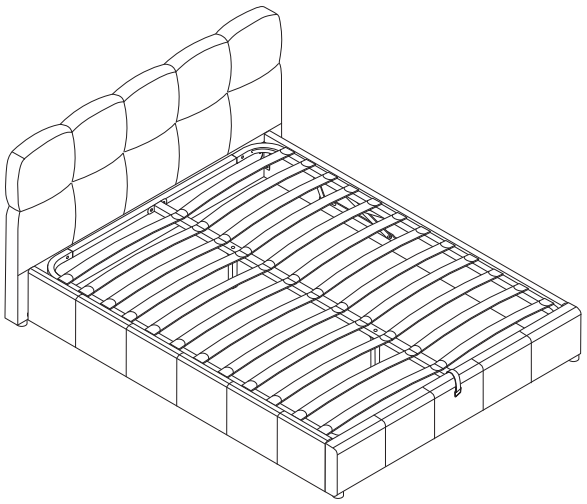

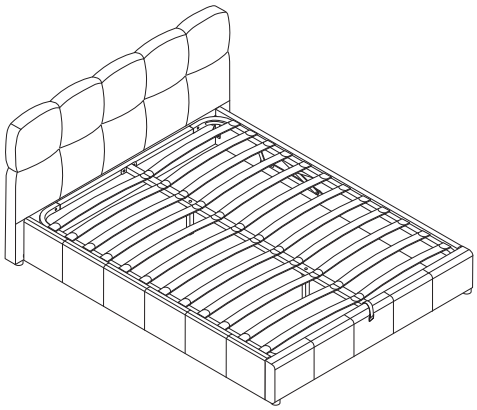

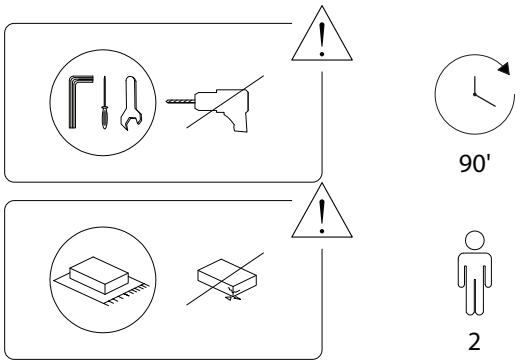

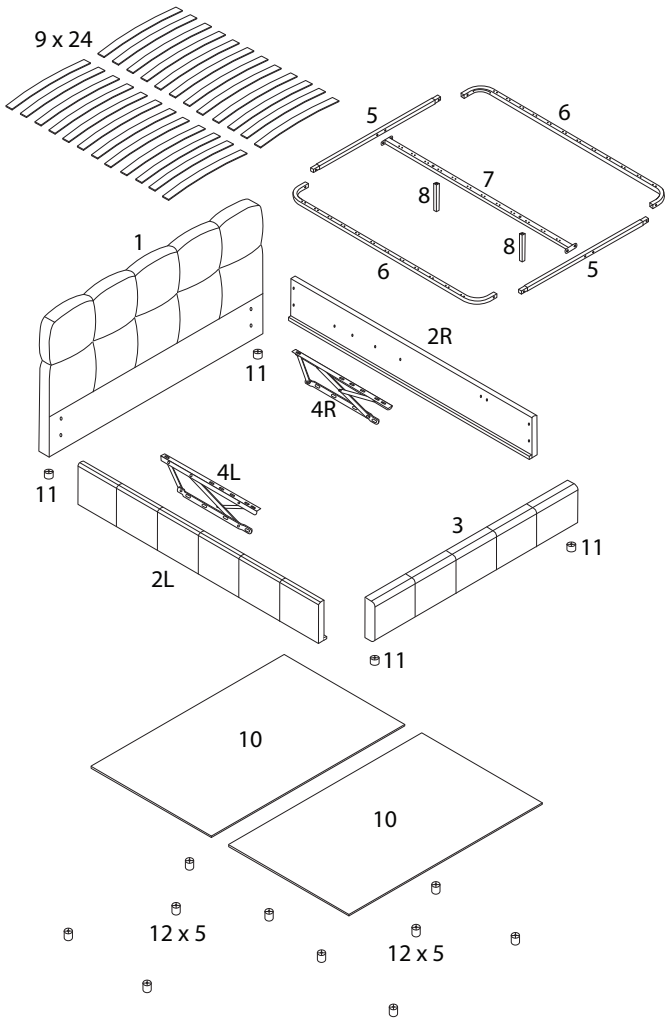

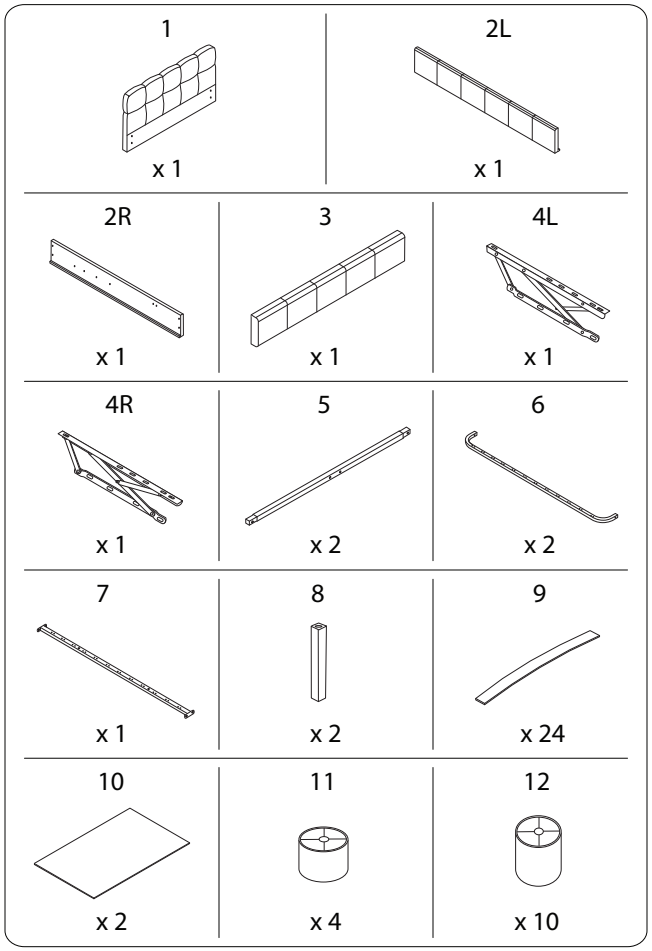

155/NOYON/030326/

A	B	C
		
x 1	x 32	x 16
D	**E**	**F**
		
x 14	x 2	x 14
G	**H**	**I**
	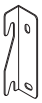	
x 1	x 4	x 4
J	**K**	**L**
		
x 24	x 12	x 1

1

1	3	11	A	D
				
x 1	x 1	x 4	x 1	x 4

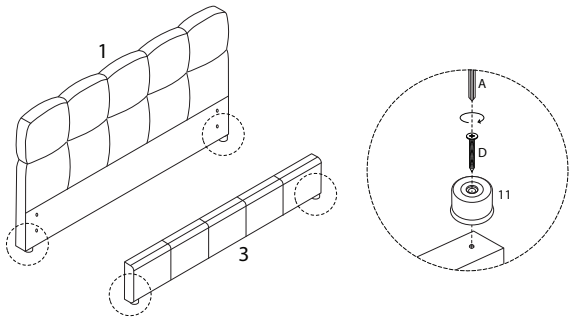

2

2L	2R	A	B	H
				
x 1	x 1	x 1	x 8	x 2

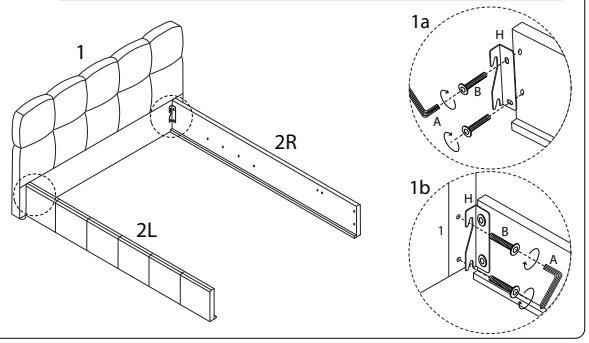

3

A	B	H
		
x 1	x 8	x 2

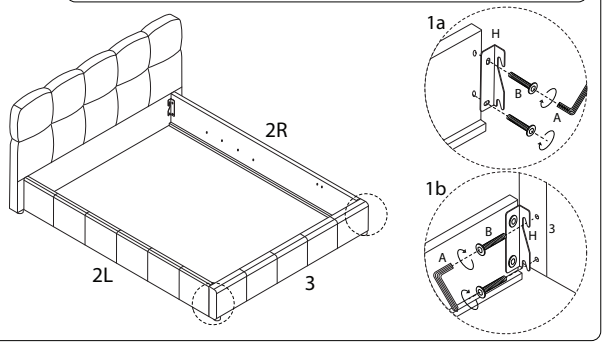

5

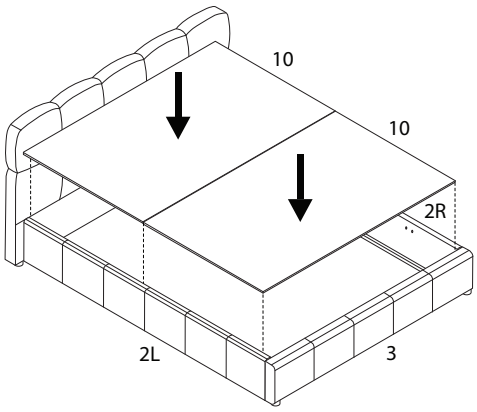

4

10	12	A	D
			
x 2	x 10	x 1	x 10

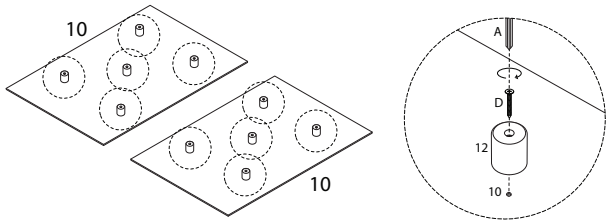

6

A	B	I
		
x 1	x 8	x 4

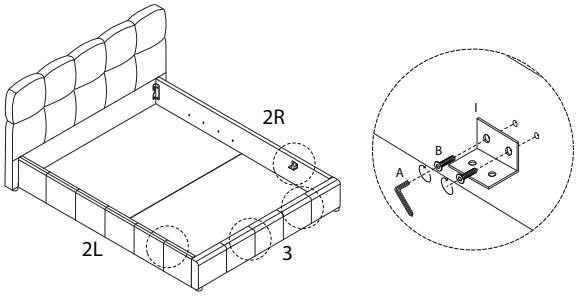

7

4L	4R	A	B
x 1	x 1	x 1	x 8

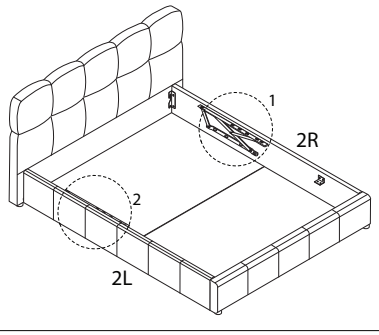

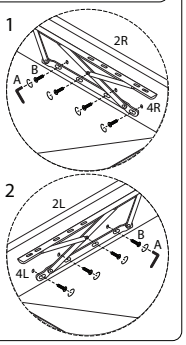

8

E	G
x 2	x 1

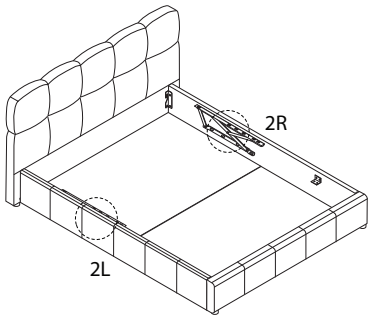

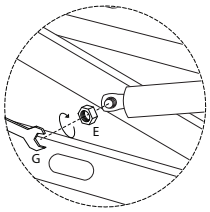

155/NOYON/030326/

9

5	6	A	C	F	G
x 2	x 2	x 1	x 4	x 4	x 1

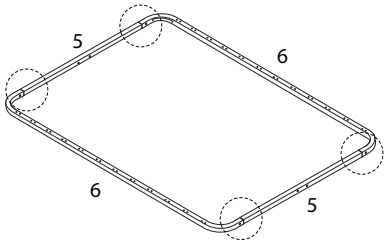

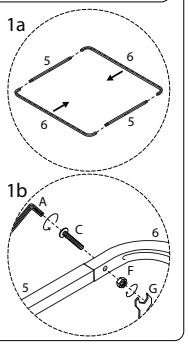

10

7	8	A	C
x 1	x 2	x 1	x 2

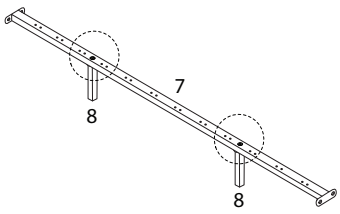

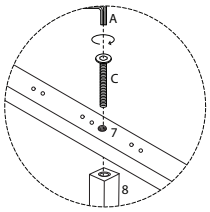

155/NOYON/030326/

11

A	C	F	G
x 1	x 4	x 4	x 1

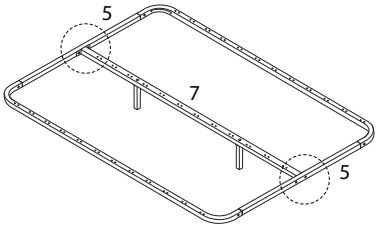

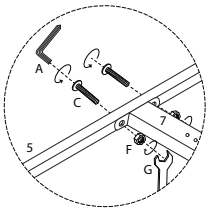

!

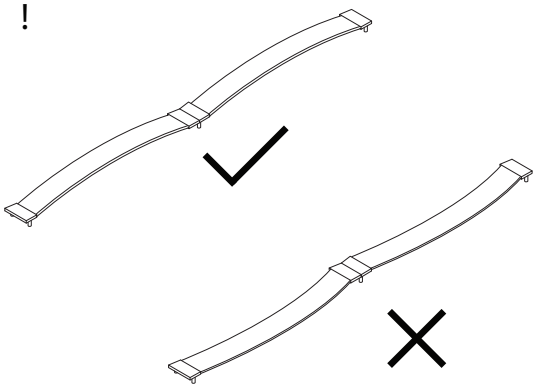

12 x 12

9	J	K
x 2	x 2	x 1

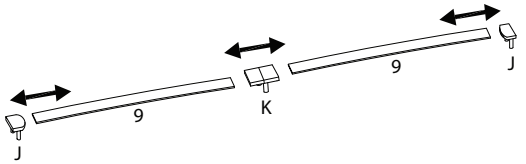

155/NOYON/030326/

13

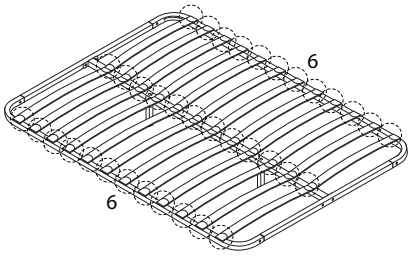

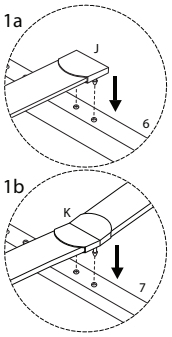

155/NOYON/030326/

14

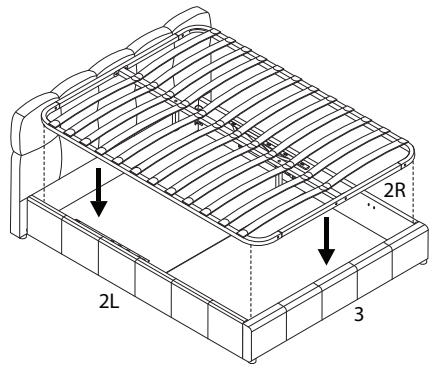

15

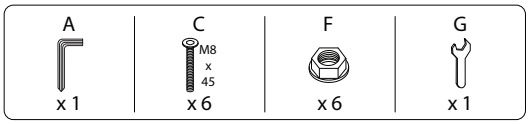

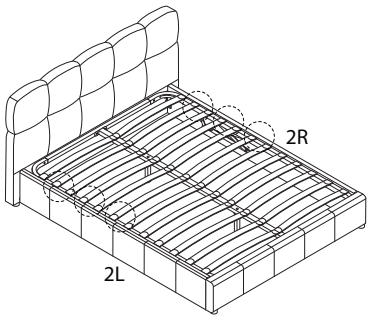

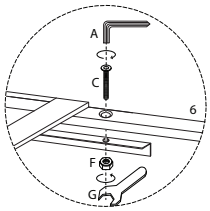

155/NOYON/030326/

16

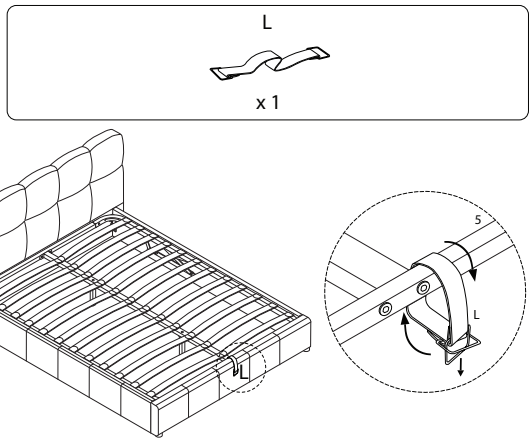

155/NOYON/030326/