FORCE

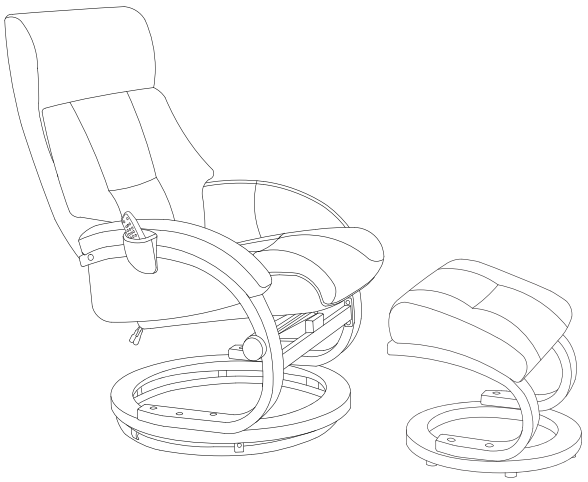

Beliani

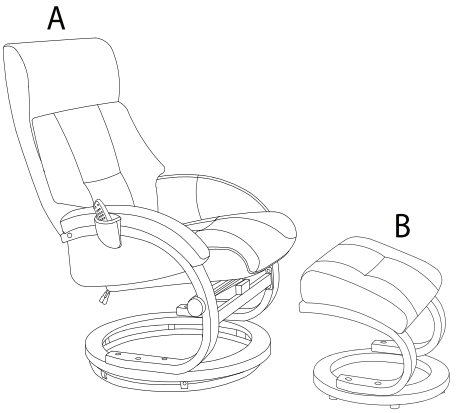

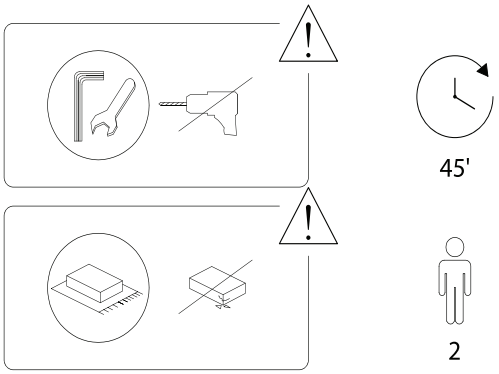

Beliani
2171/FORCE/161024/

A

A	B	C	D_L	D_R
x 1	x 1	x 1	x 1	x 1

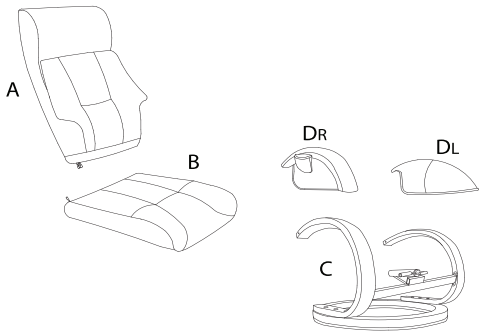

G	I	J	K	L	N
M8 x 70	M8 x 25	M6 x 40		M8 x 55	
x 2	x 2	x 6	x 3	x 1	x 1

O	P	S	U	Q	R
M8		M6			
x 1	x 1	x 1	x 2	x 1	x 1

Beliani
2171/FORCE/161024/

1

B	C	K	L	O	P
			M8 x 55	M8	
x 1	x 1	x 1	x 1	x 1	x 1

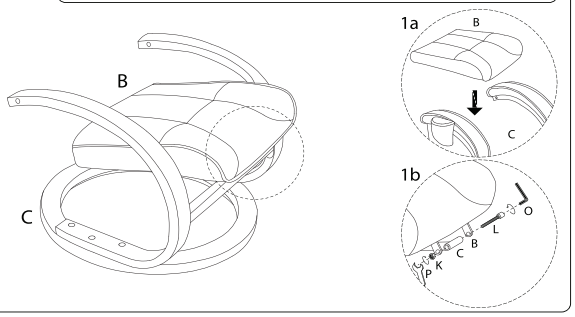

2

D_L	D_R	J	S
		M6 x 40	M6
x 1	x 1	x 6	x 1

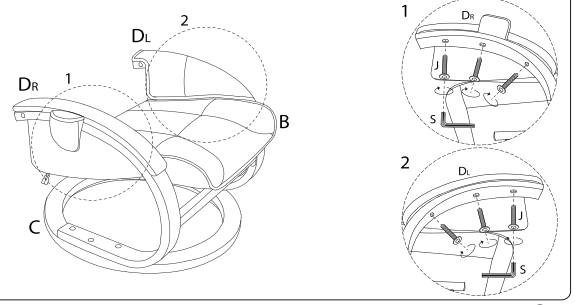

Beliani
2171/FORCE/161024/

3

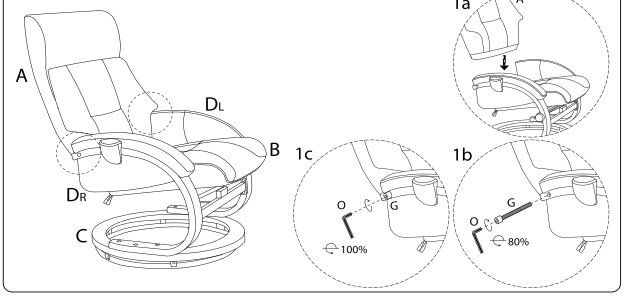

4

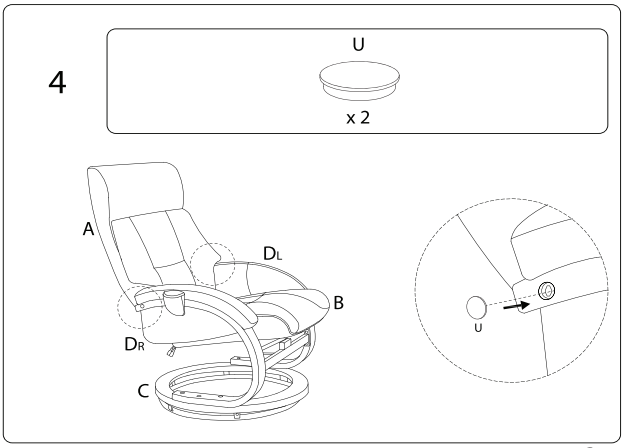

Beliani
2171/FORCE/161024/

5

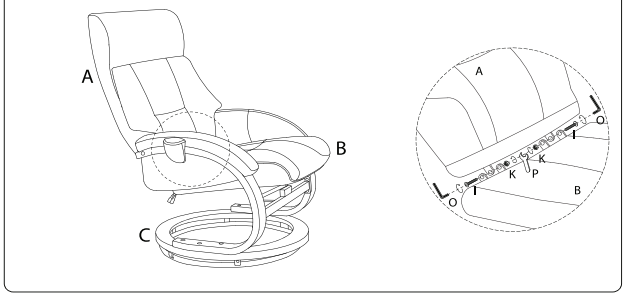

6

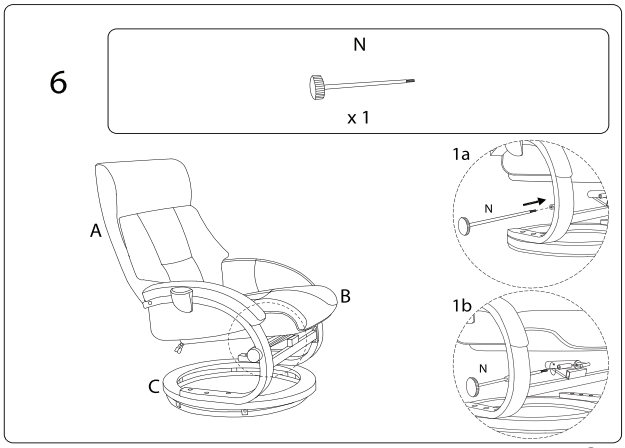

Beliani
2171/FORCE/161024/

7

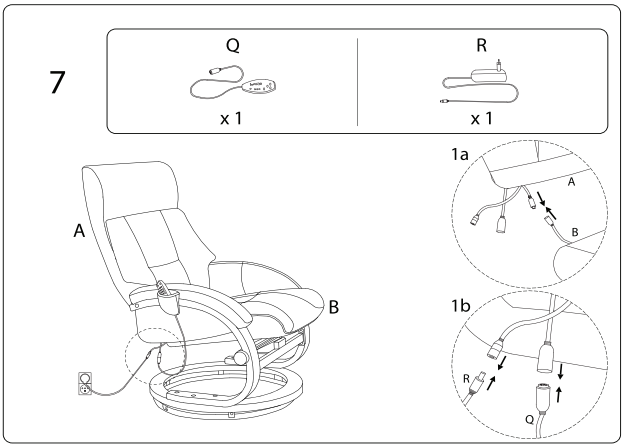

Beliani
2171/FORCE/161024/

B

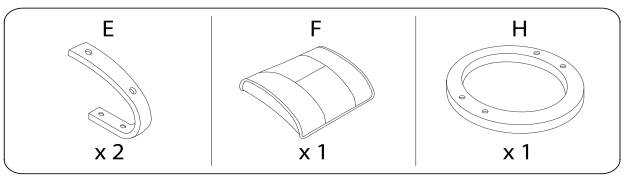

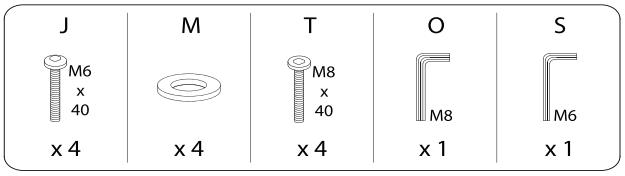

Beliani
2171/FORCE/161024/

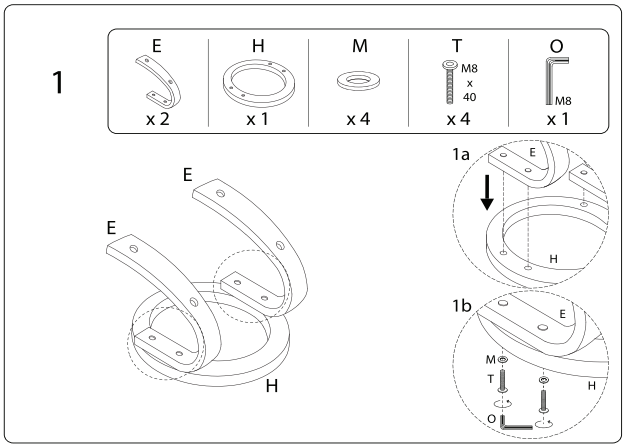

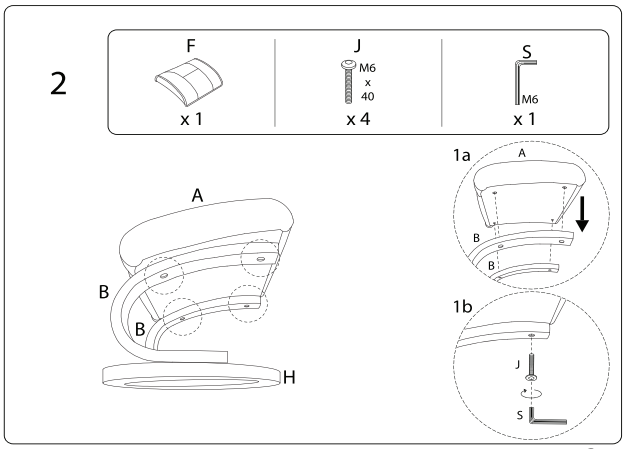

Beliani
2171/FORCE/161024/

Schweiz, Suisse, Svizzera
mail@beliani.ch
tel. +41 43 508 22 33

Deutschland
mail@beliani.de
tel. +49 221 6778 9927

Österreich
mail@beliani.at
tel. +43 1 375 00 57

United Kingdom
mail@beliani.co.uk
tel. +44 20 3318 8222

Polska
mail@beliani.pl
tel. +48 91 350 83 60

Nederland
mail@beliani.nl
tel. +31 38 744 0103

France
mail@beliani.fr
tel. +33 1 87 39 86 15

Italia
mail@beliani.it
tel. +39 06 56548602

España
mail@beliani.es
tel. +34 932 714 061

Portugal
mail@beliani.pt
tel. +351 22 145 07 45

Norge
mail@beliani.no
tel. +47 21 56 99 75

Sverige
mail@beliani.se
tel. +46 8 446 891 58

Suomi
mail@beliani.fi
tel. +358 9 4245 0464

Danmark
mail@beliani.dk
tel. +45 89 88 10 86

Česká Republika
mail@beliani.cz
tel. +420 228881514

Slovensko
mail@beliani.sk
tel. +421 232784612

Magyarország
mail@beliani.hu
tel. +36 (1) 211 4034

România
mail@beliani.ro
tel. +40 316 300 677

België, Belgique
mail@beliani.be
tel. +32 28085614

Representative in EU:

Beliani Kundendienst GmbH
Leverkusener Str. 31
16303 Schwedt
Germany