HAZELVALE

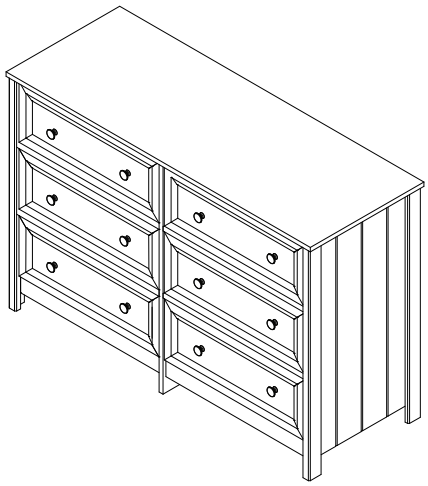

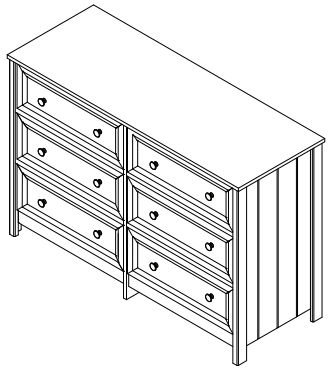

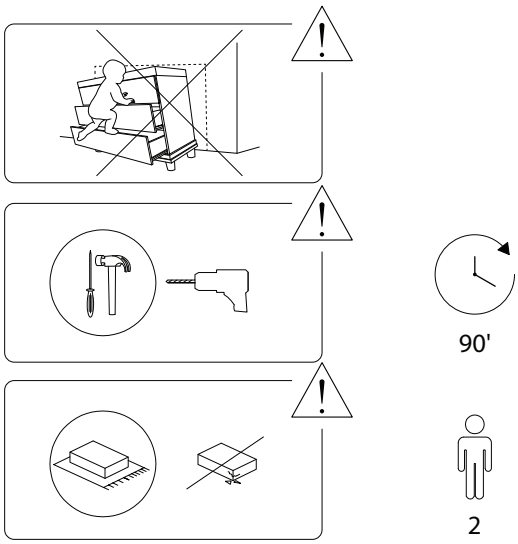
90'
2

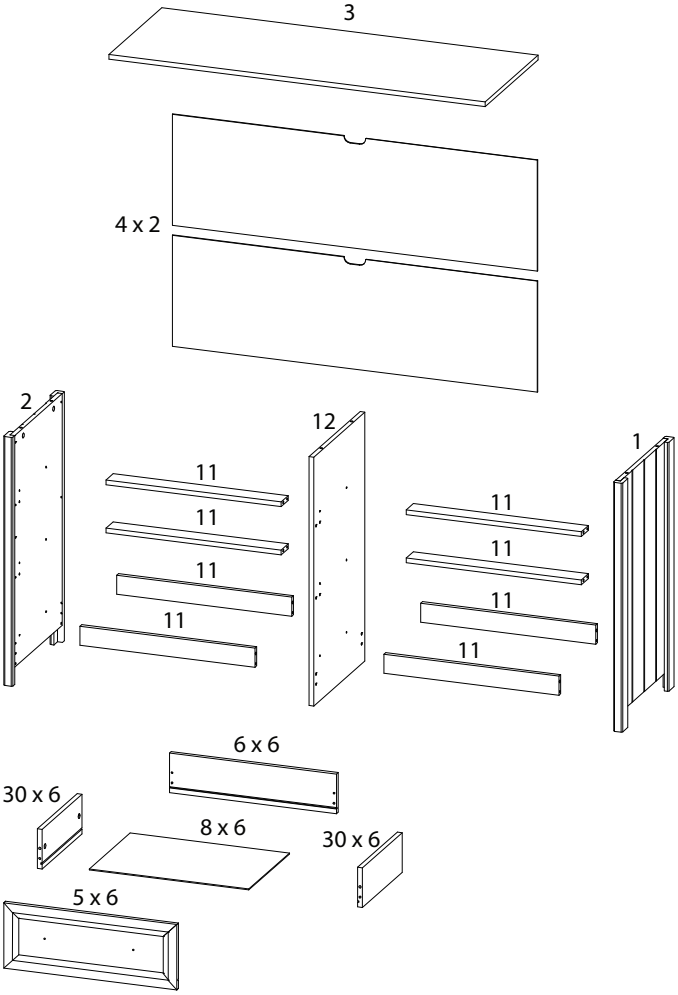
3
4 x 2
2
12
1
11
11
11
11
11
11
11
11
6 x 6
30 x 6
8 x 6
30 x 6
5 x 6

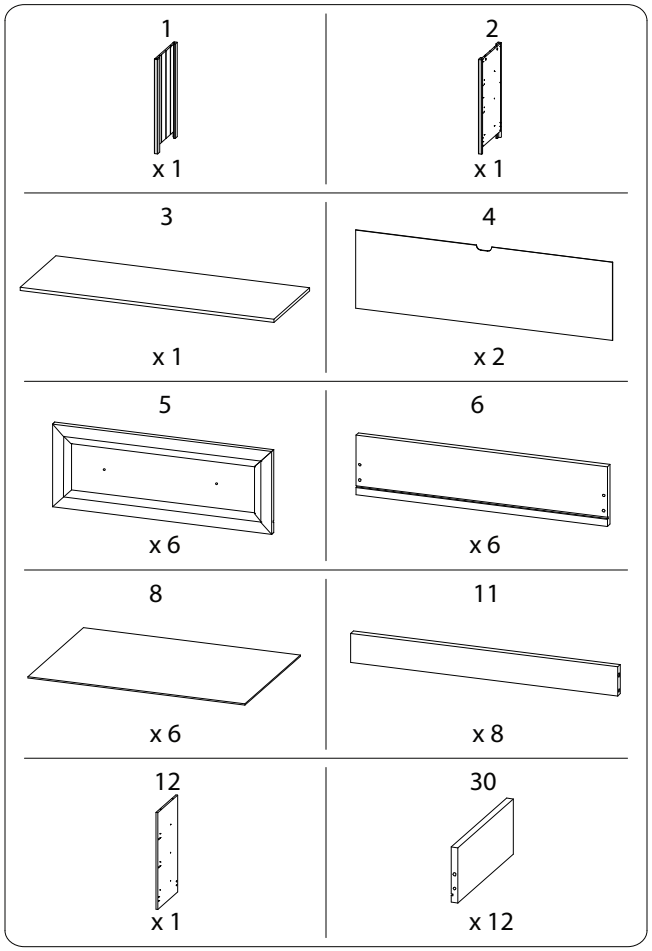
1
x 1
2
x 1
3
x 1
4
x 2
5
x 6
6
x 6
8
x 6
11
x 8
12
x 1
30
x 12

A	AS	B	C	CR1
x 32	x 4	x 38	x 46	x 6
CR2	**CR3**	**CR4**	**D**	**EN**
x 6	x 6	x 6	M3.5 x 14 x 54	x 40
FB	**FL**	**P**	**PF**	**PX**
M4 x 20 x 12	x 4	M6 x 8 x 24	x 2	x 12
U	**X**	**Z1**	**Z2**	**Z3**
x 12	x 6	M4 x 13 x 1	M6 x 35 x 1	x 2
Z4		**Z5**		
x 1		x 1		

1 x 6

5	6	B
x 1	x 1	x 4

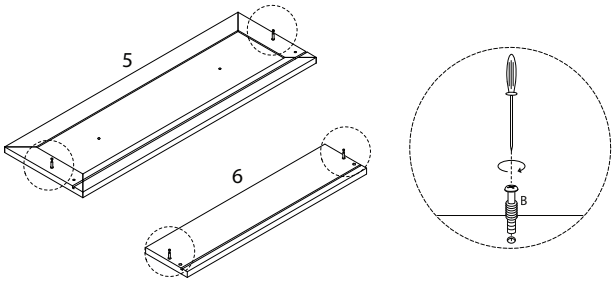

2

3	B
x 1	x 6

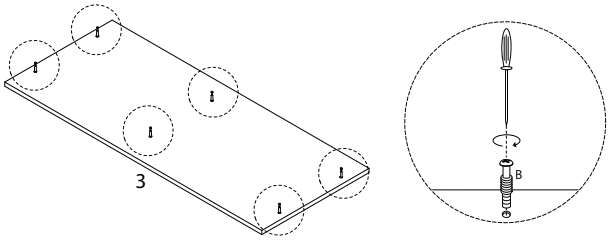

3 x 12

30	A
x 1	x 2

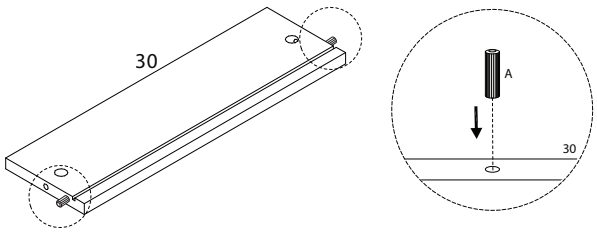

5

CR3	CR4	D	P
x 3	x 3	M3.5 x 14 x 6	M6 x 8 x 12

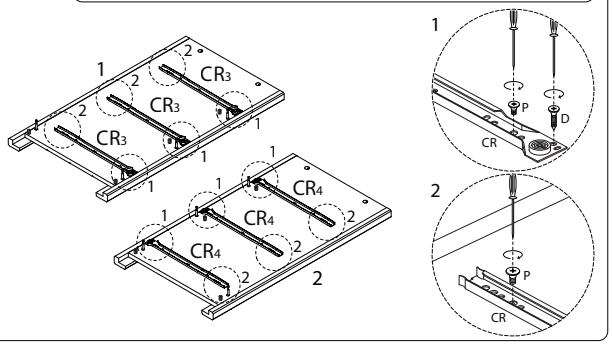

4

1	2	A	B
x 1	x 1	x 8	x 8

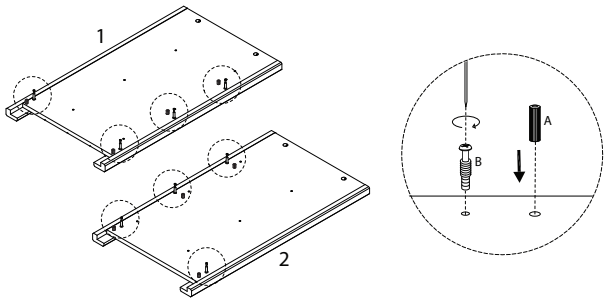

6

12	CR4	D	P
x 1	x 3	M3.5 x 14 x 3	M6 x 8 x 6

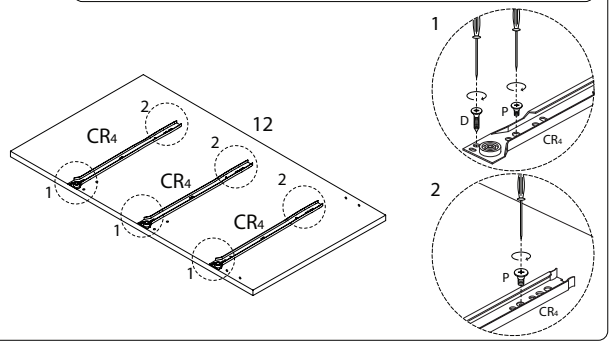

7

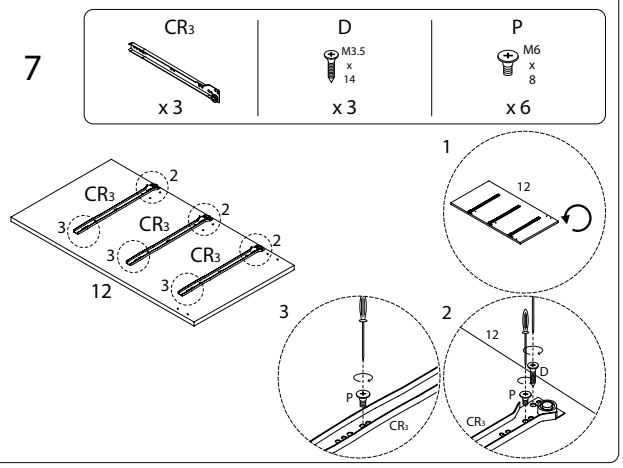

8

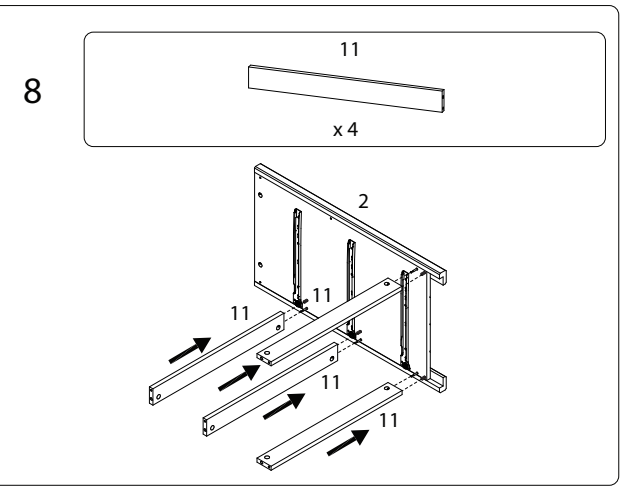

9

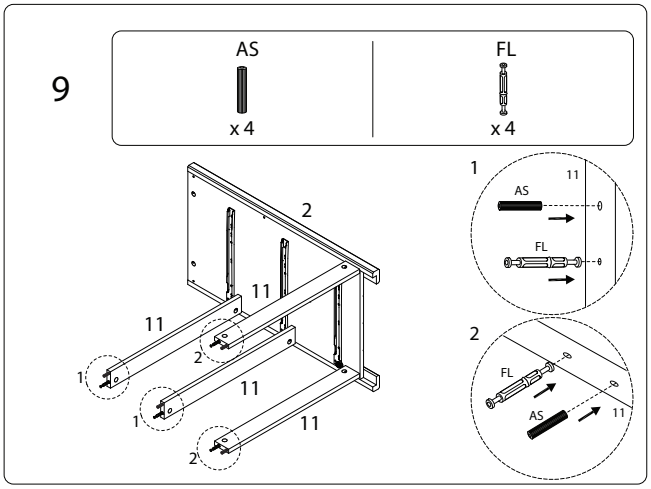

10

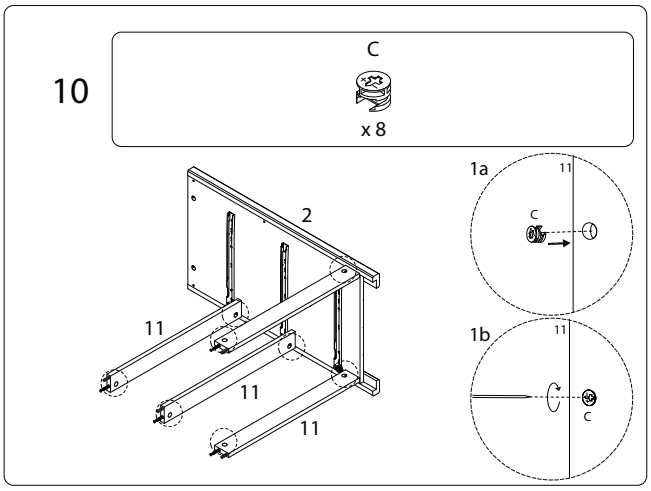

11

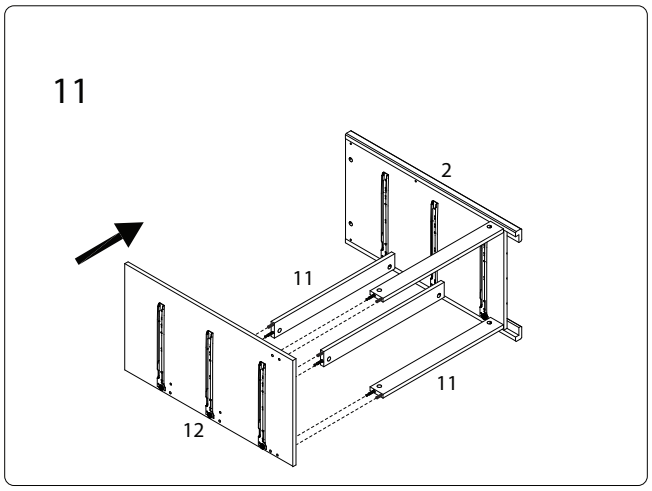

12

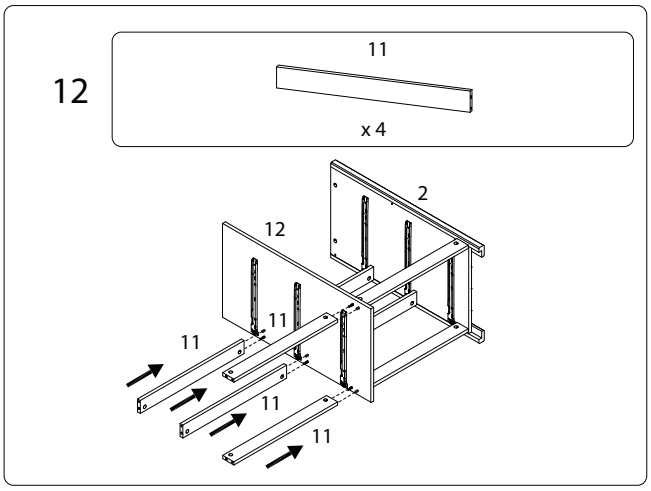

13

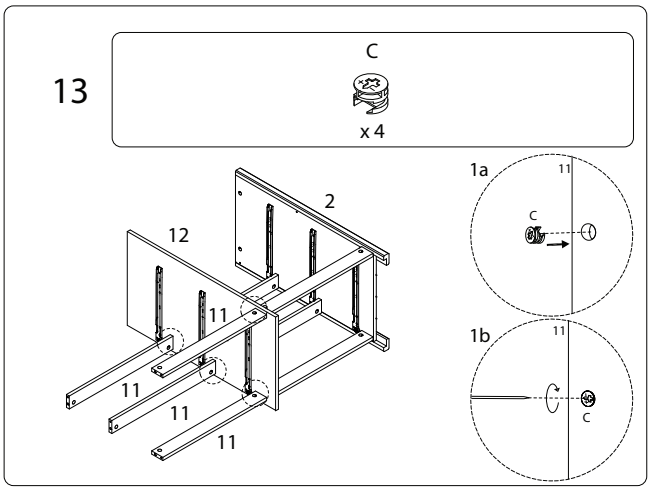

14

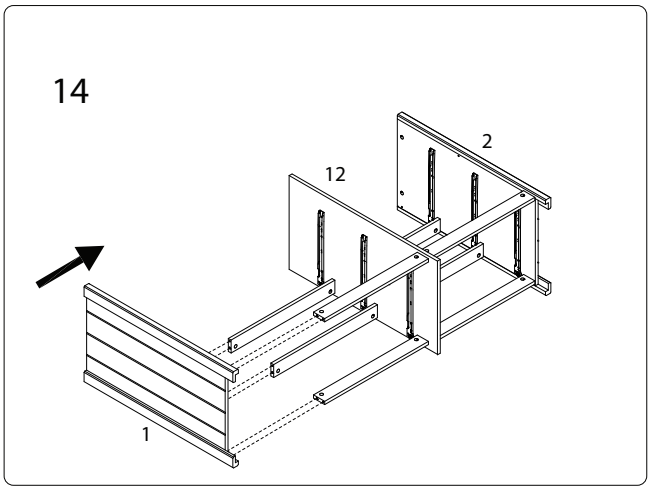

15

C

x 4

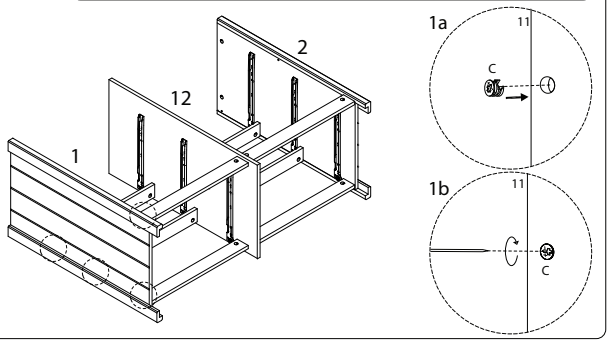

16

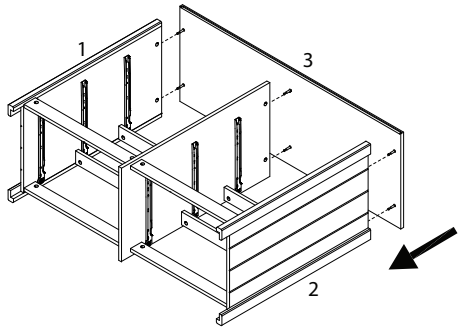

17

C

x 6

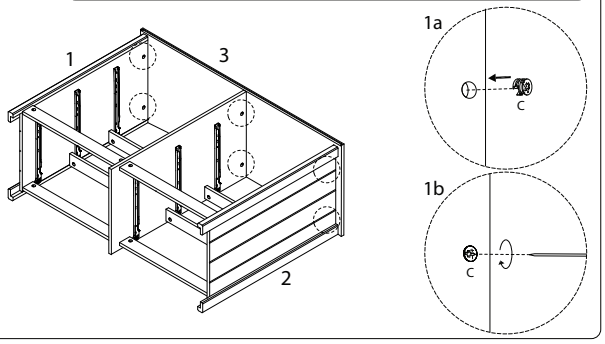

18

4

x 2

PF

x 2

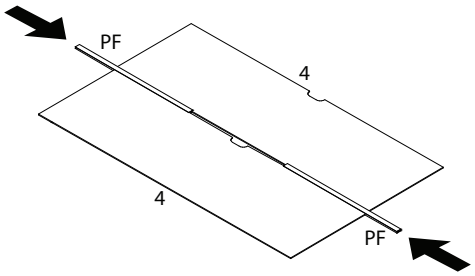

19

EN

x 40

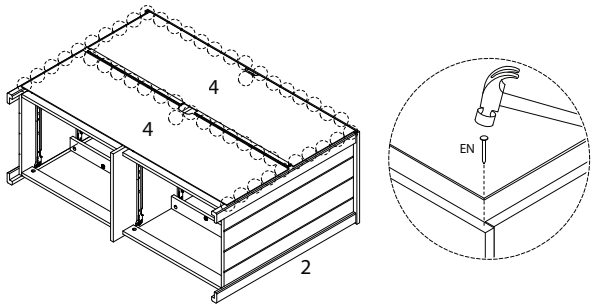

20

D

M3.5 x 14

x 6

X

x 6

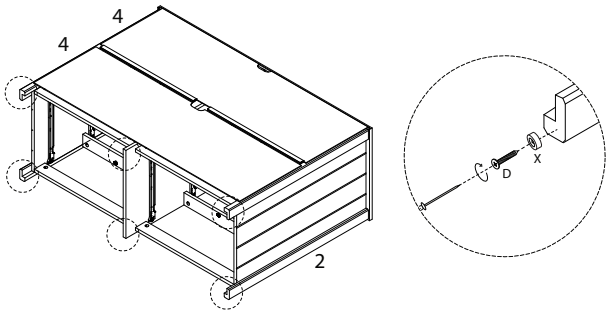

21 x 6

C

x 2

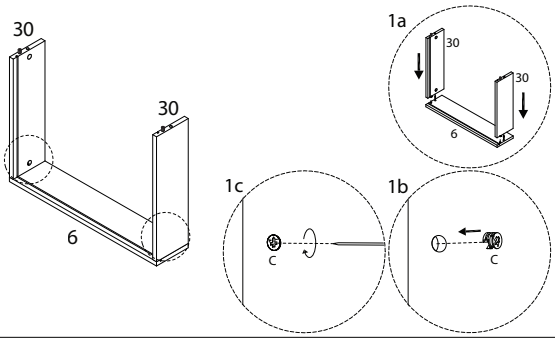

22 x 6

8

x 1

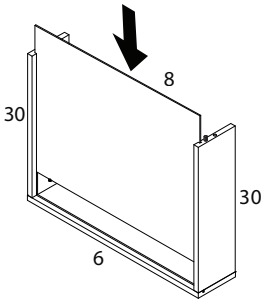

23 x 6

C
x 2

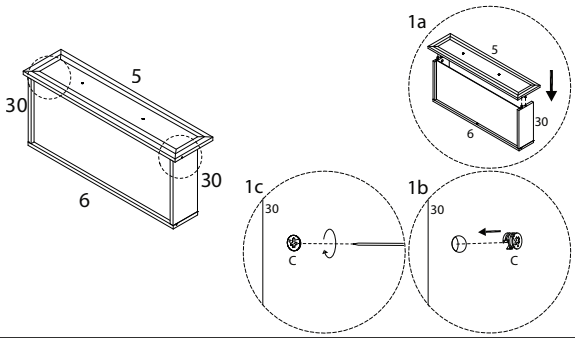

24 x 6

FB	PX
M4 x 20	
x 2	x 2

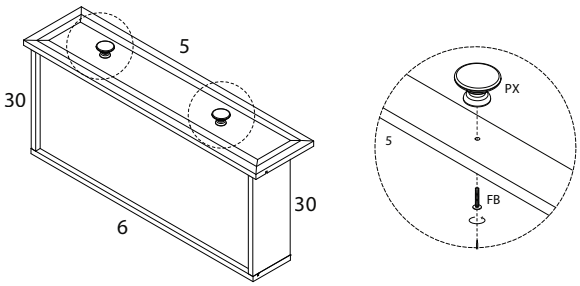

25 x 6

CR_1	CR_2	D
		M3.5 x 14
x 1	x 1	x 4

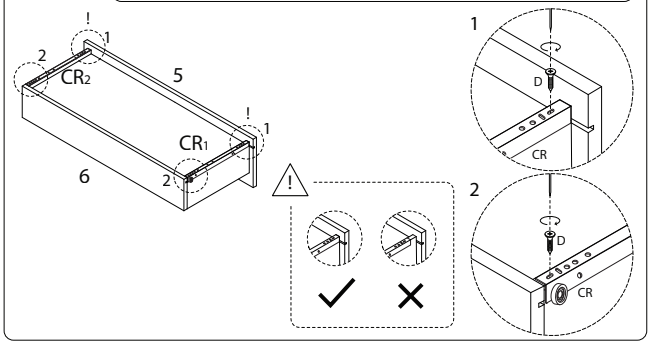

26 x 6

D	U
M3.5 x 14	
x 2	x 2

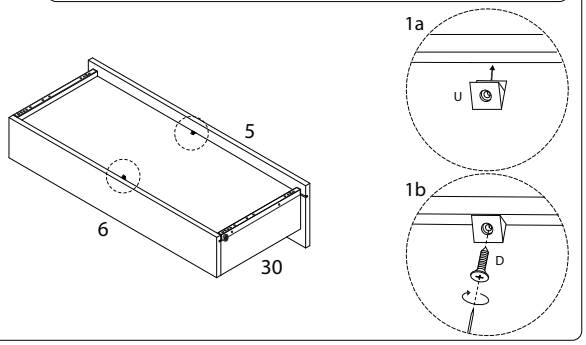

27

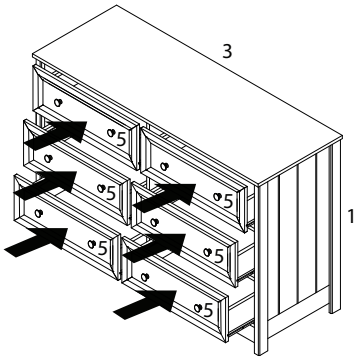

26
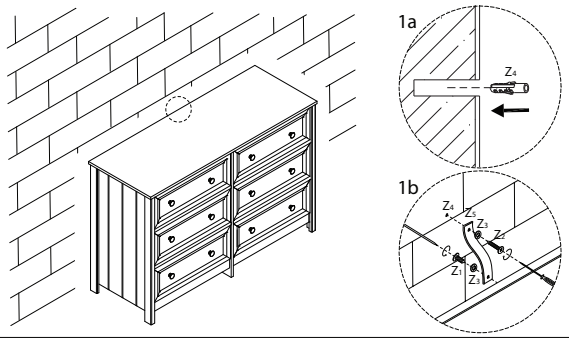
Z_1	Z_2	Z_3	Z_4	Z_5
M4 x 13	M6 x 35			
x 1	x 1	x 2	x 1	x 1