TITICACA

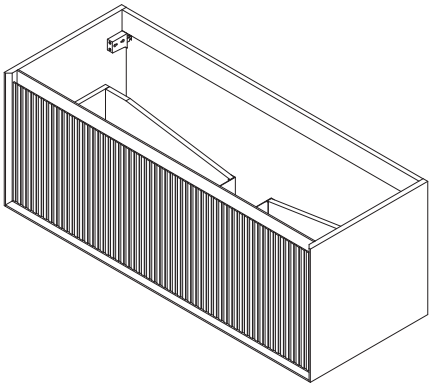

1/18

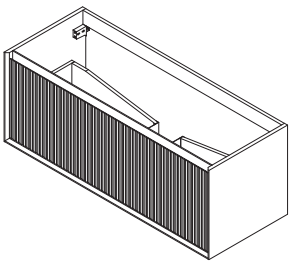

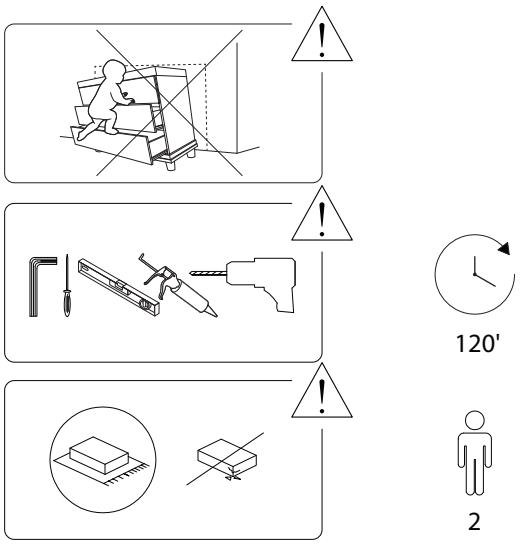

2/18

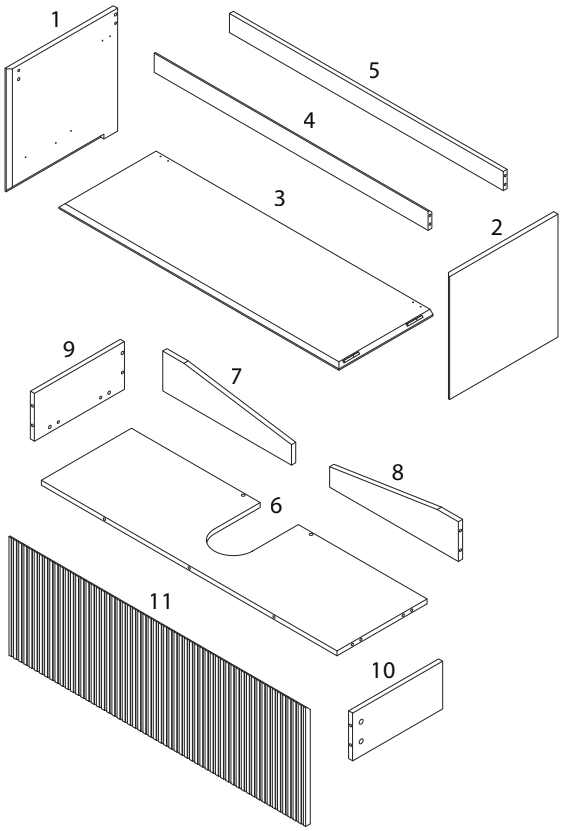

3/18

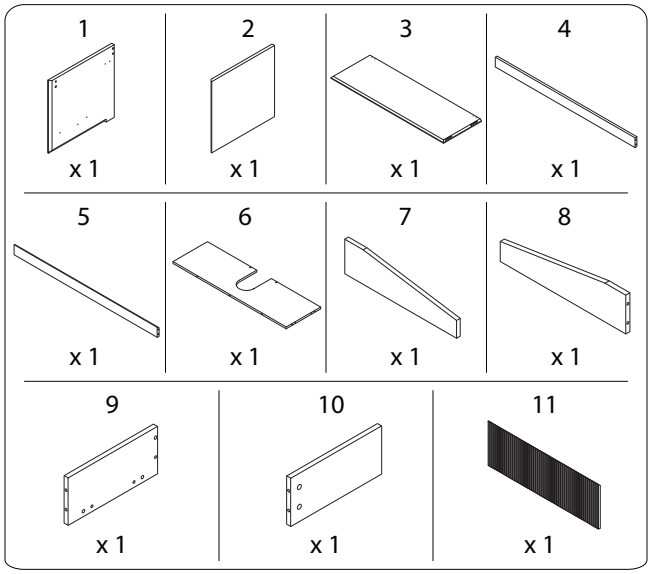

4/18

77/TITICACA/171225/

A	B	C	D1
			
x 19	x 19	x 10	x 2
D2	D3	E	F
	 ST4 x 30	 ST4 x 14	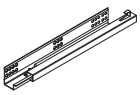
x 2	x 4	x 21	x 1
G	H	I	M
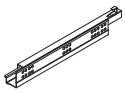	 ST4 x 25	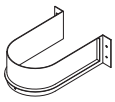	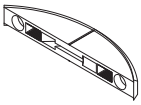
x 1	x 2	x 1	x 4
N	O	P	Q
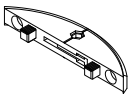			
x 4	x 1	x 15	x 8
R	S	T	U
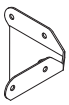		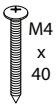 M4 x 40	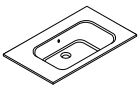
x 2	x 4	x 4	x 1

77/TITICACA/171225/

1

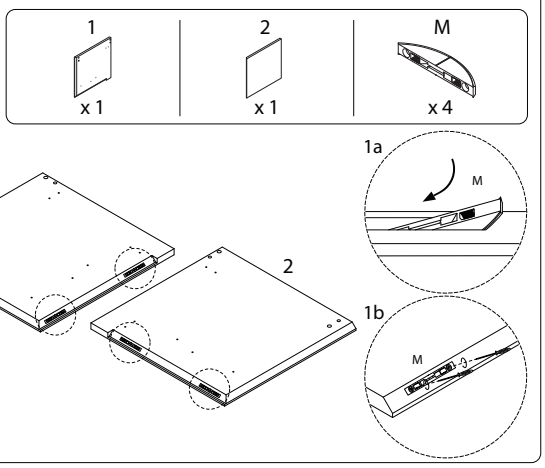

2

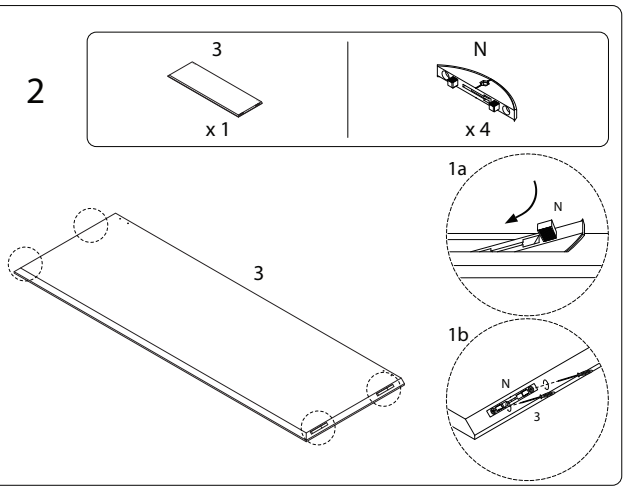

77/TITICACA/171225/

3

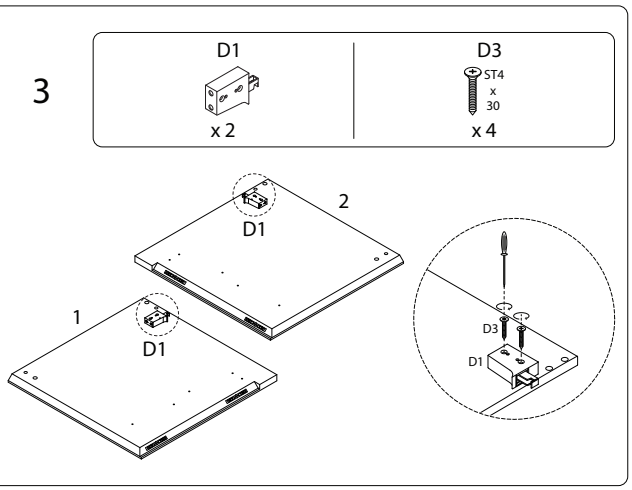

5

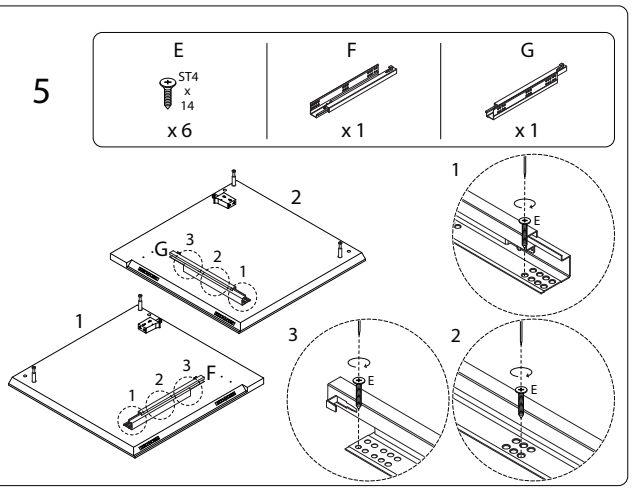

4

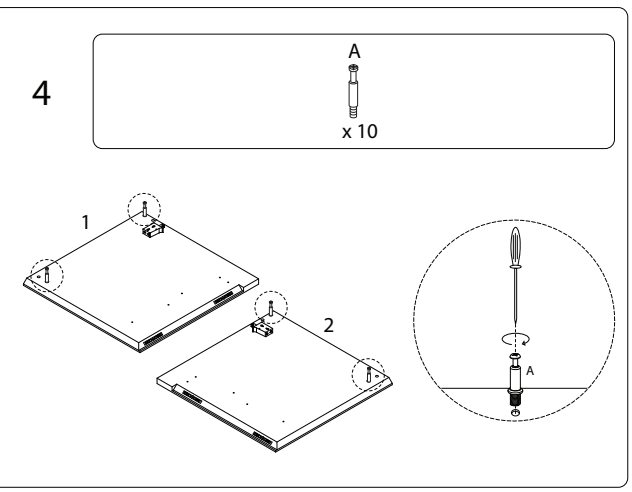

6

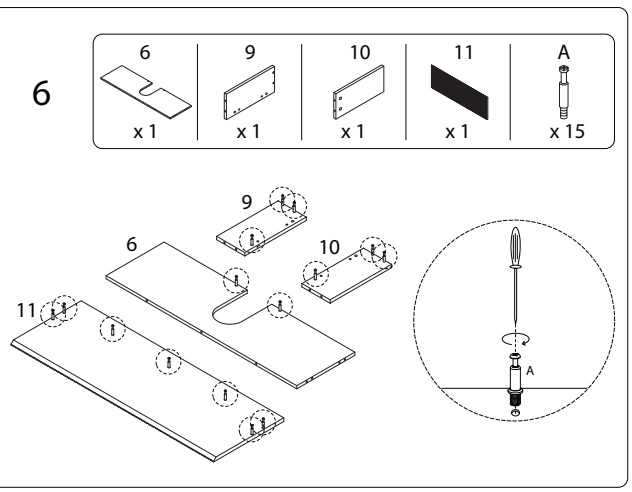

77/TITICACA/171225/

77/TITICACA/171225/

7

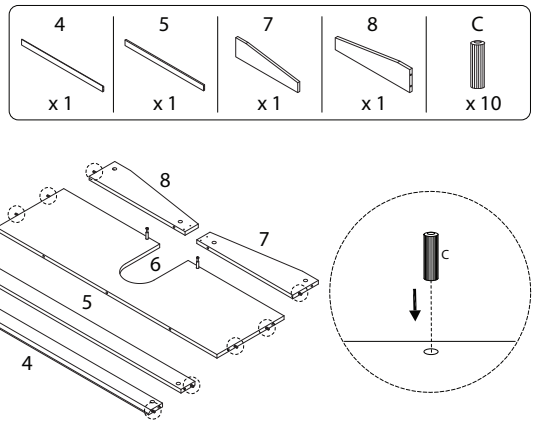

8

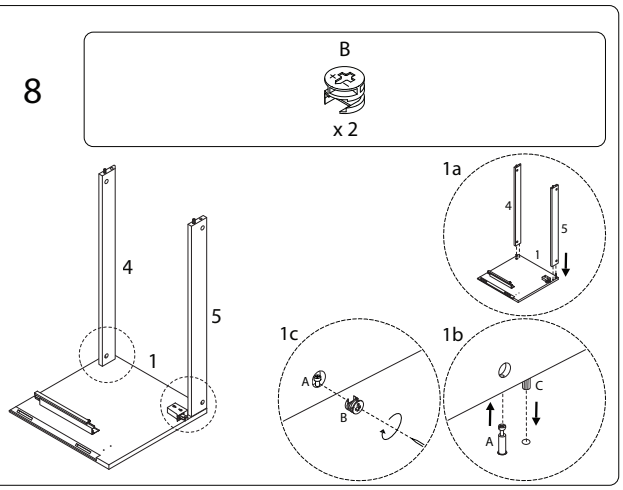

9/18

9

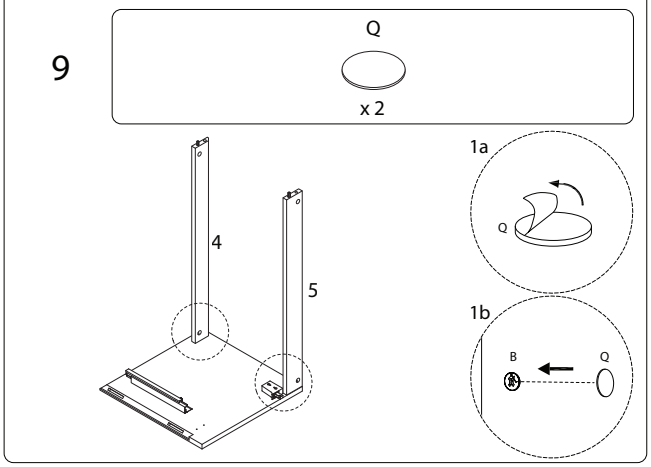

10

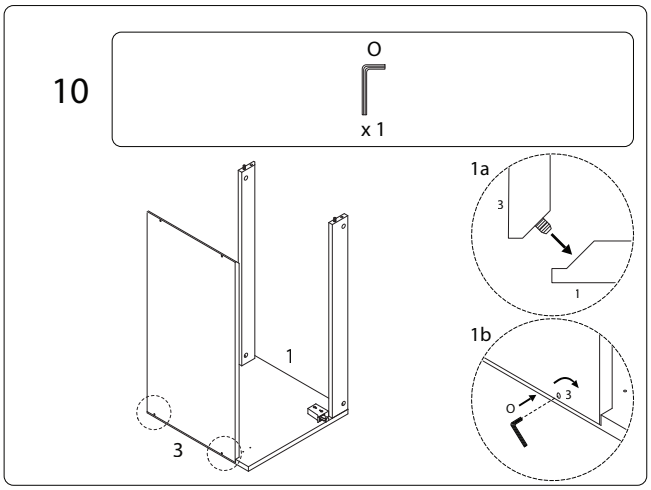

10/18

11

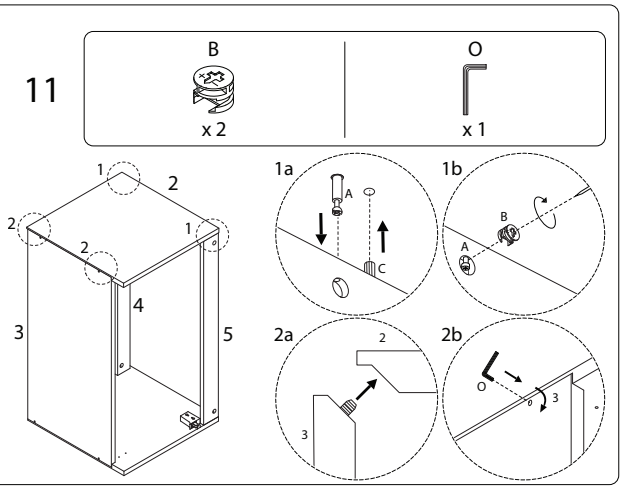

12

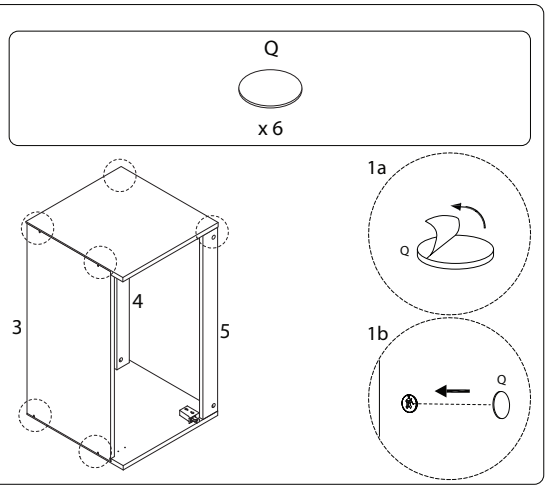

11/18

13

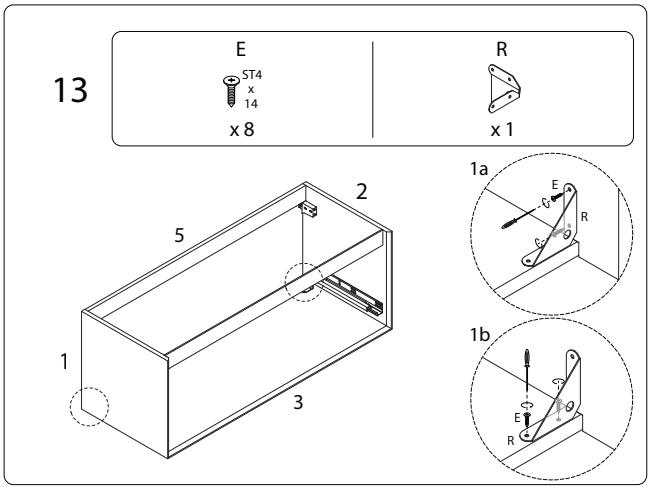

14

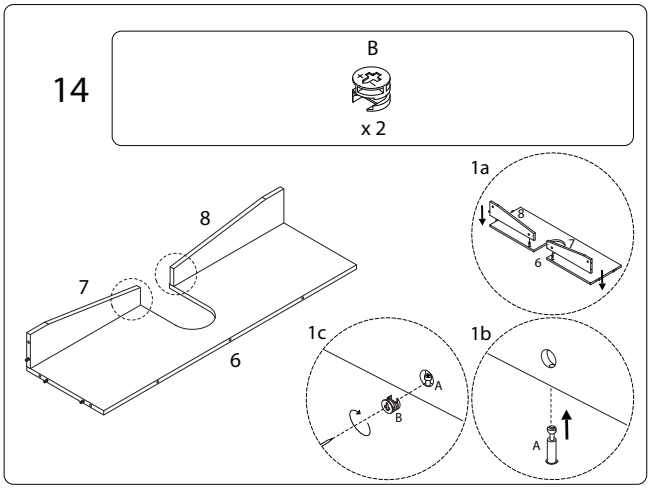

12/18

15

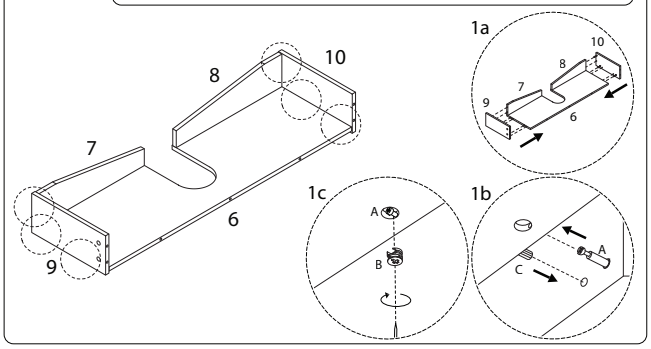

16

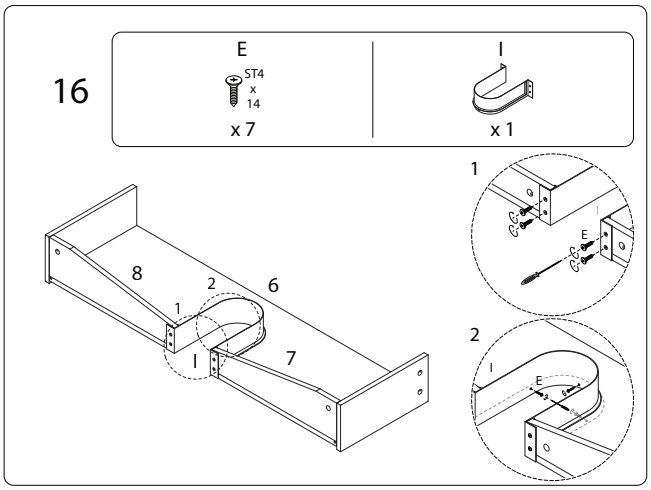

77/TITICACA/171225/

17

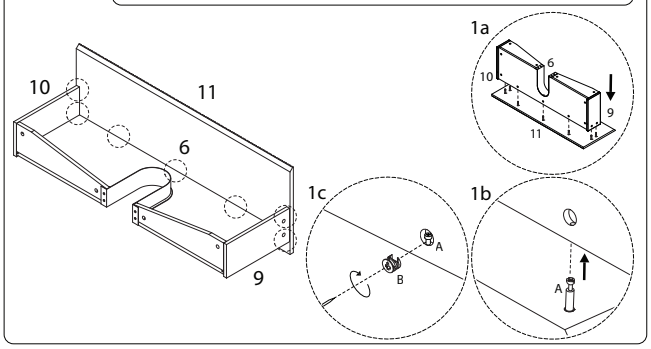

18

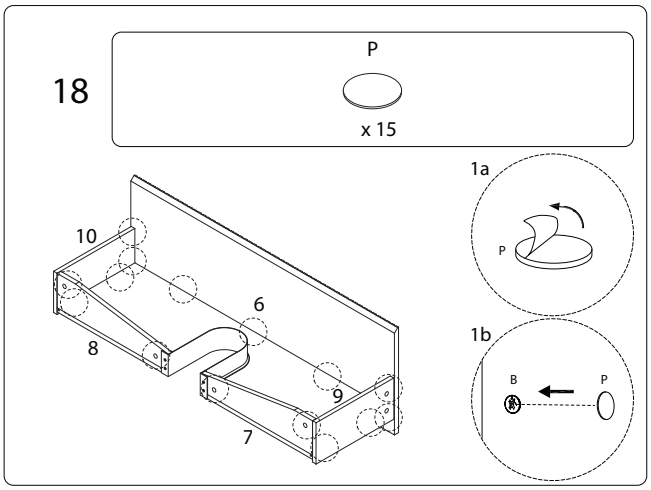

77/TITICACA/171225/

19

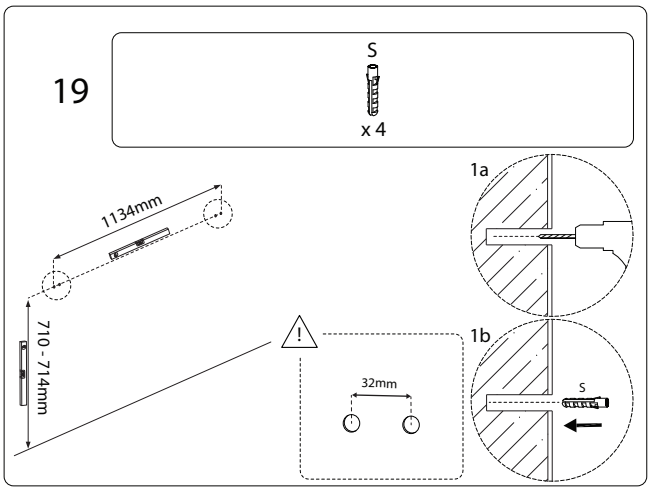

21

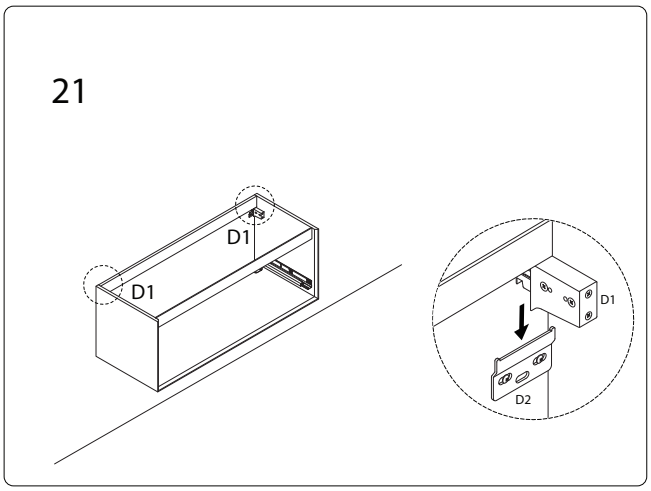

20

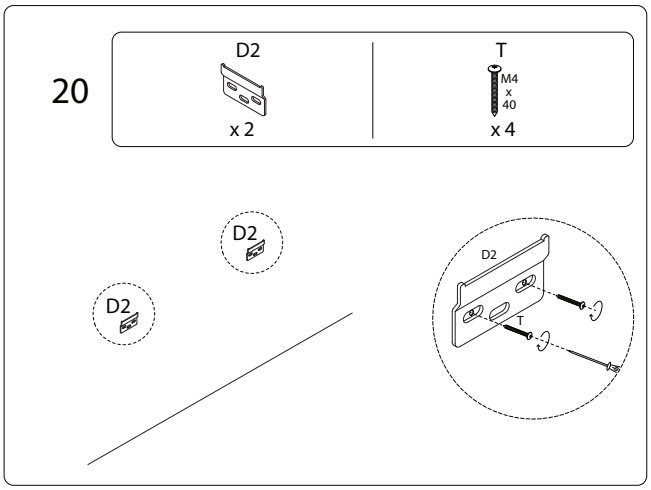

77/TITICACA/171225/

!

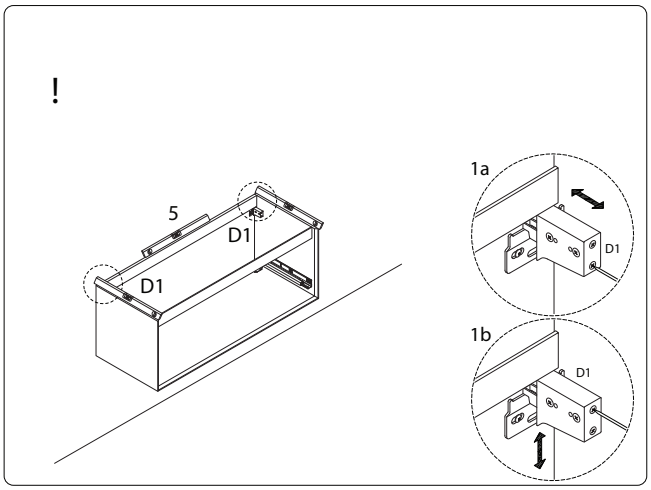

77/TITICACA/171225/

22

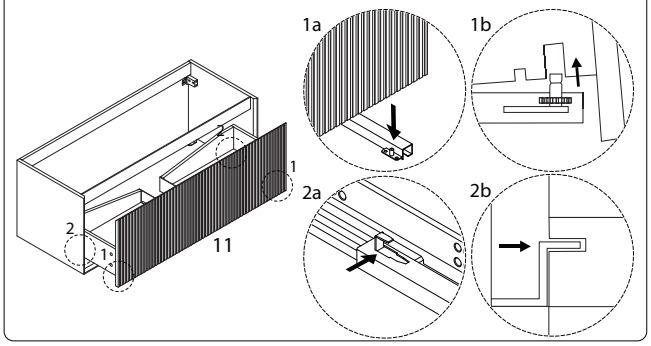

23

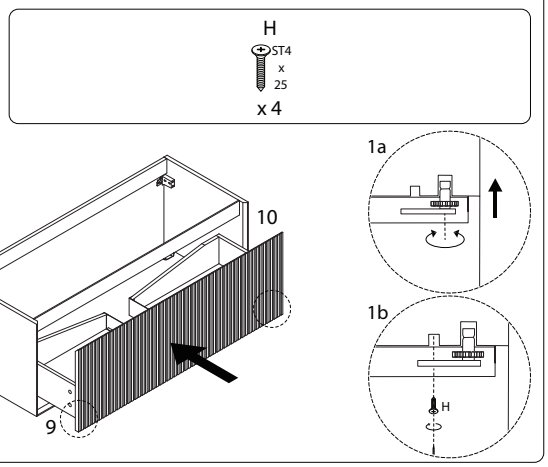

24

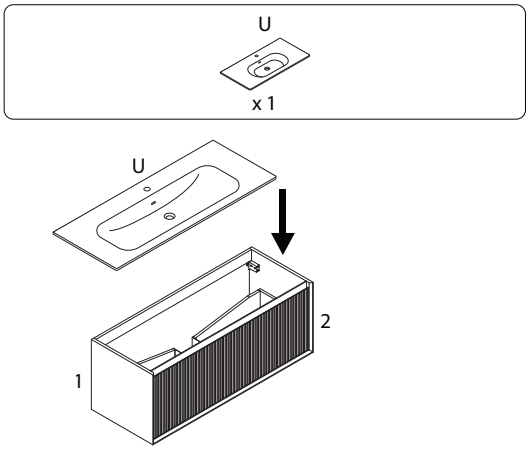

25

