MAKANA

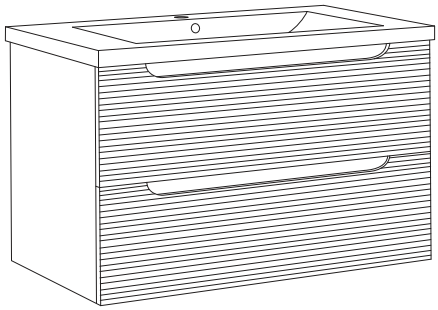

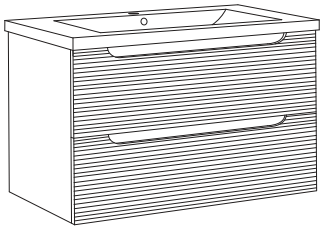

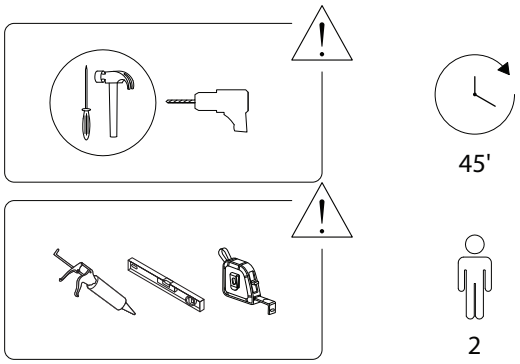

2353/MAKANA/100925/

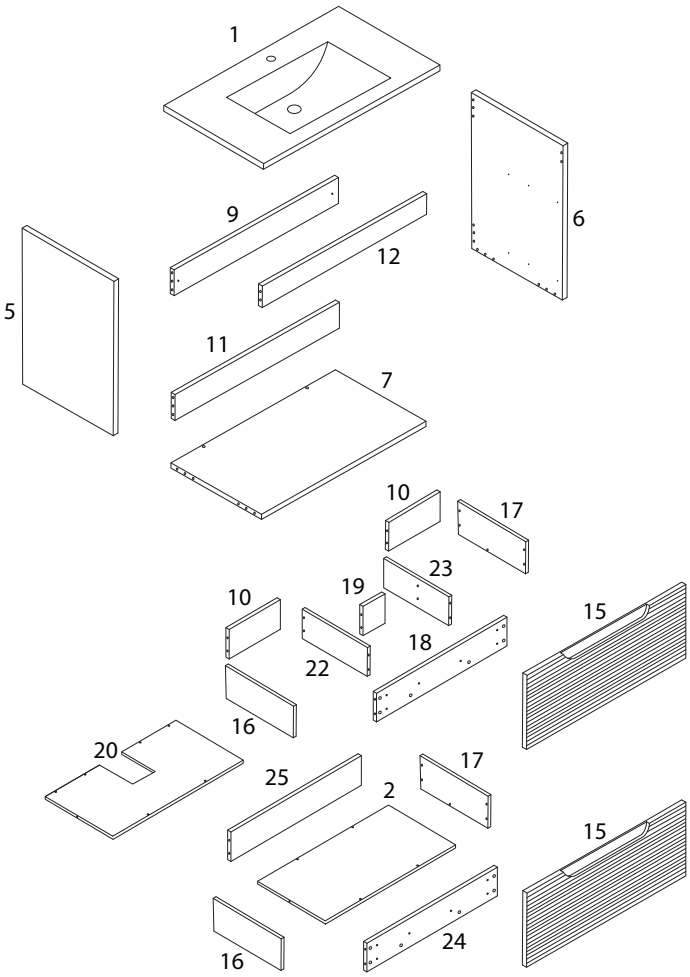

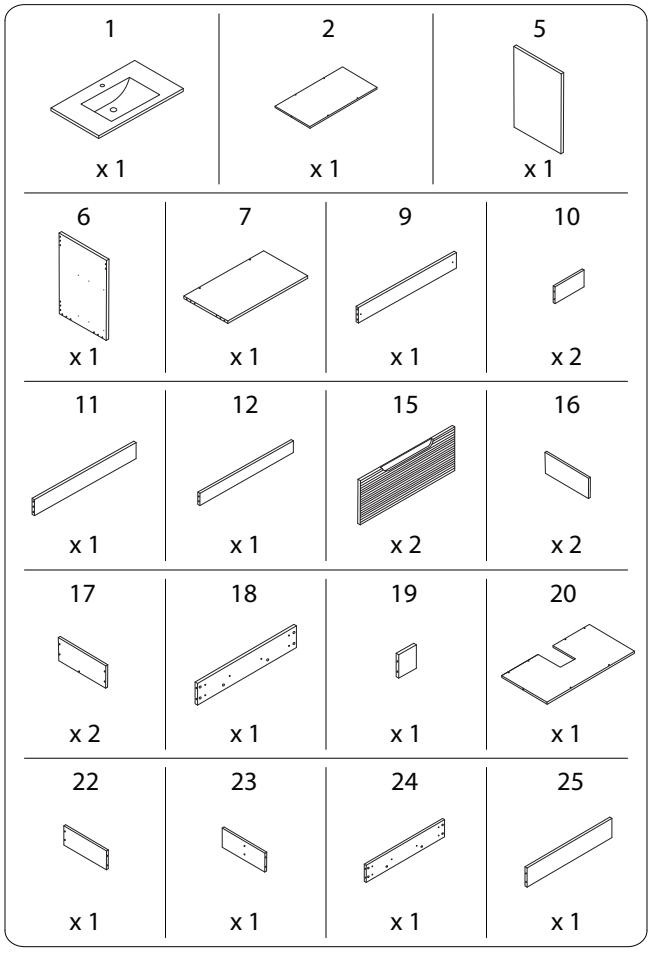

2353/MAKANA/100925/

N1	N2	N4
x 60	x 60	x 12
N7L	**N7R**	**N10**
x 2	x 2	M4 x 14 x 32
N11	**N12**	**N13A**
M4 x 25 x 8	M6 x 25 x 4	x 2
N13B	**N13C**	
M6 x 70 x 2	x 2	

1

5	6	7	N1
x 1	x 1	x 1	x 18

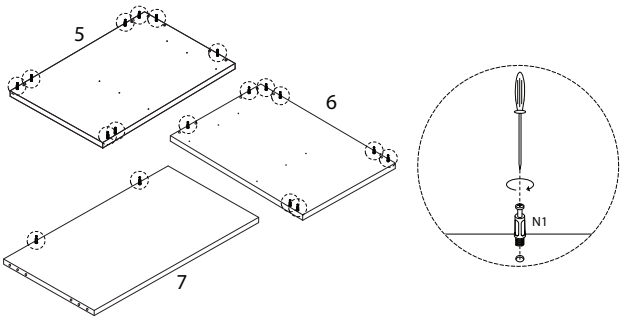

2

9	11	N4
x 1	x 1	x 12

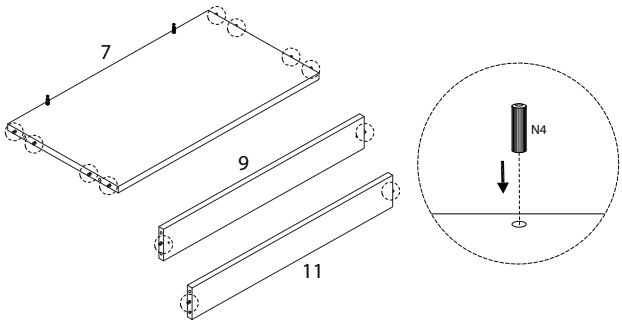

3

N2
x 2

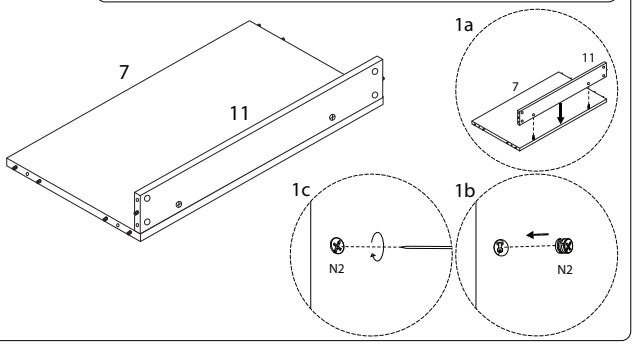

4

12	N2
x 1	x 8

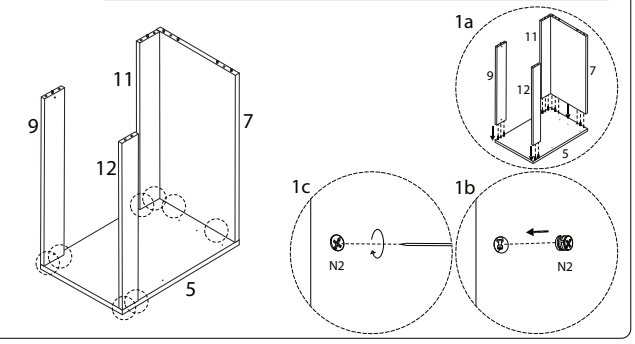

5

N2
x 8

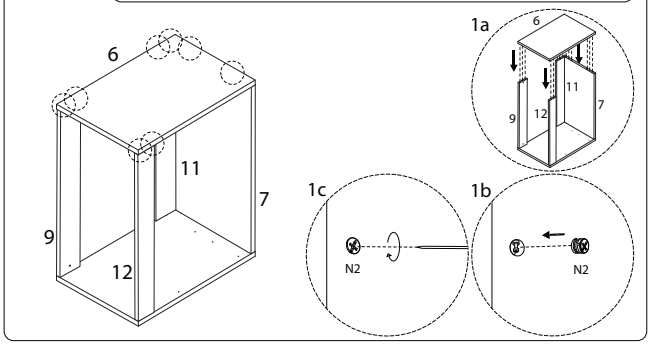

6

N7R	N10
x 2	M4 x 14 x 6

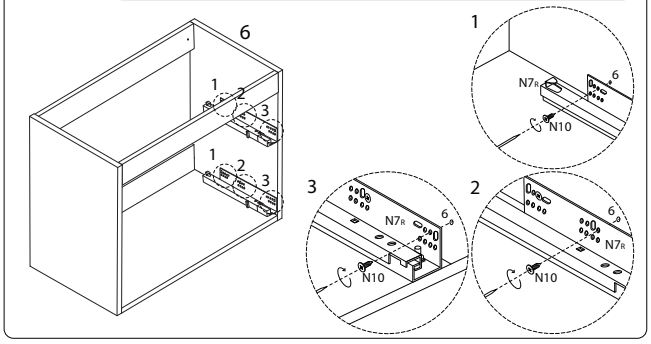

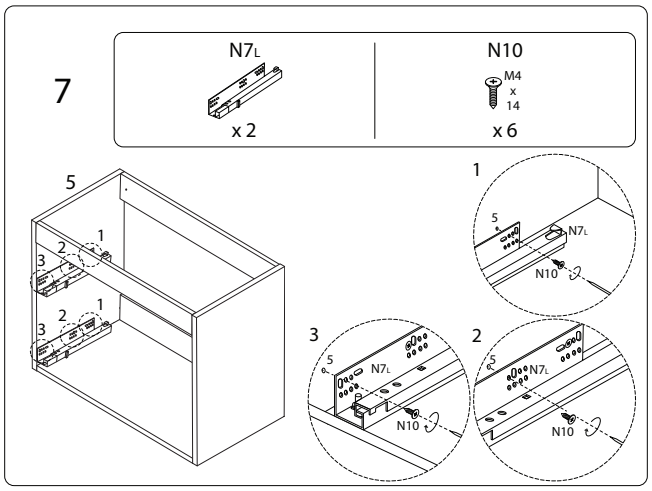
7
N7L
x 2
N10
M4 x 14
x 6
5
1
2
3
N7L
N10

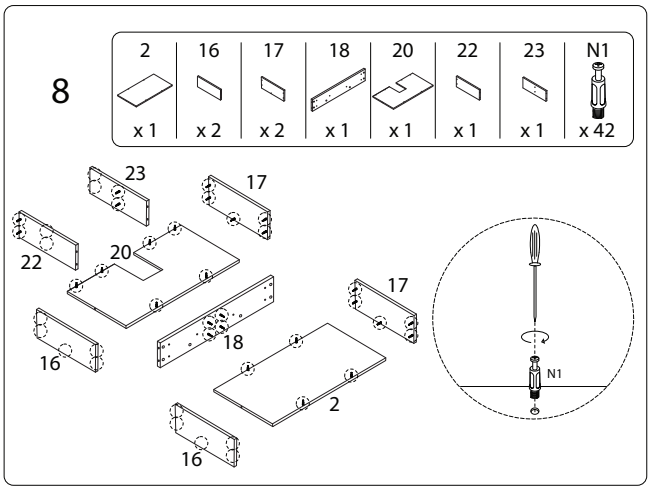
8
2 x 1
16 x 2
17 x 2
18 x 1
20 x 1
22 x 1
23 x 1
N1 x 42
23
17
22
20
18
16
2
N1

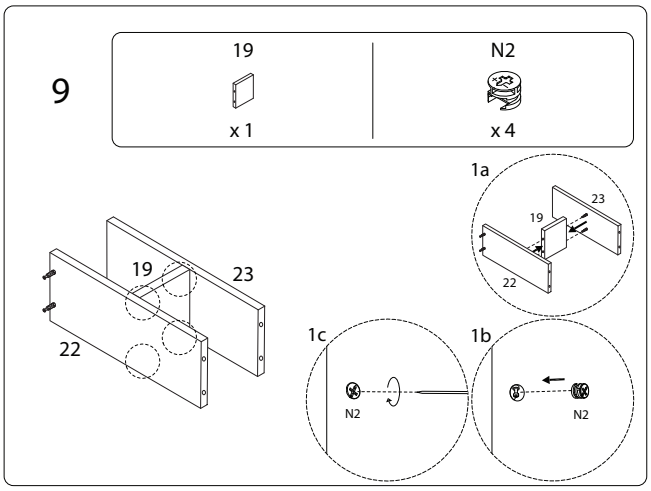
9
19 x 1
N2 x 4
19
23
22
1a
1b
1c
N2

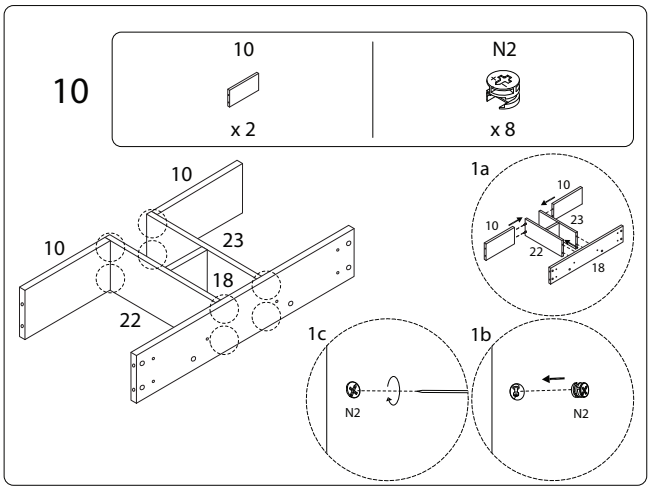
10
10 x 2
N2 x 8
10
23
18
22
1a
1b
1c
N2

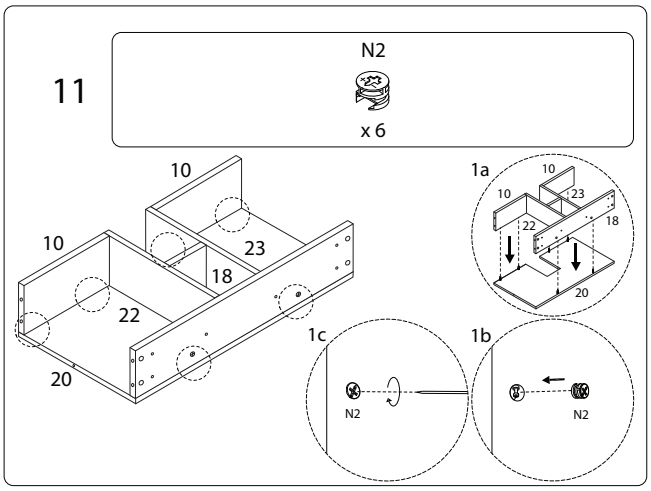
11
N2 x 6
10
23
18
22
20
1a
1b
1c
N2

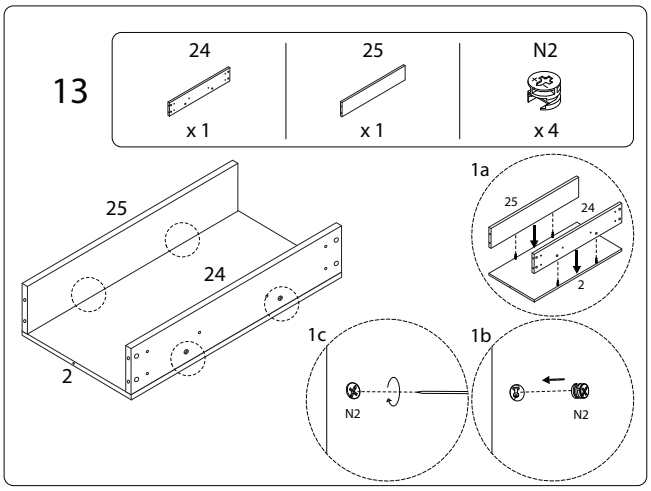
13
24 x 1
25 x 1
N2 x 4
25
24
2
1a
1b
1c
N2

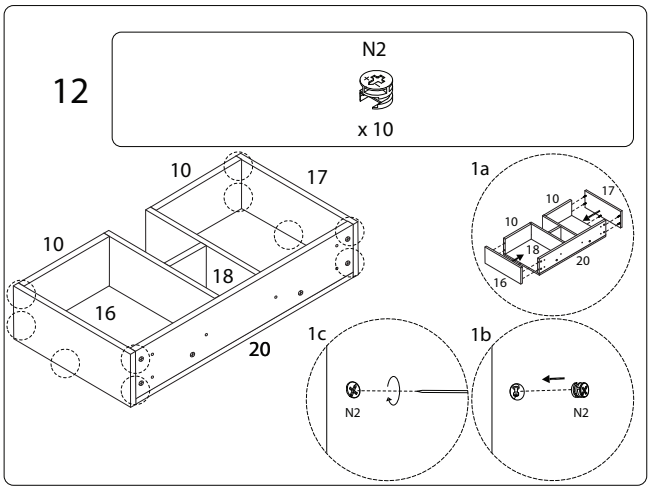
12
N2 x 10
10
17
18
16
20
1a
1b
1c
N2

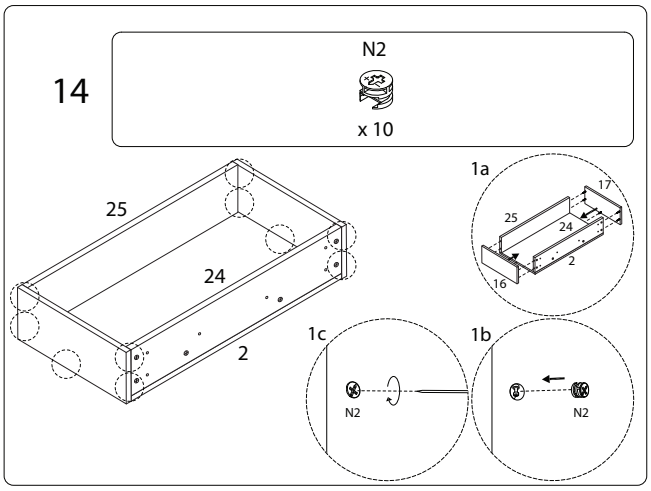
14
N2 x 10
25
24
2
1a
1b
1c
N2

15

15	N12
x 2	M6 x 25 x 4

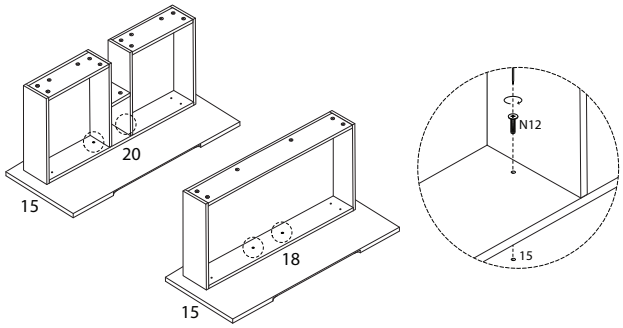

16

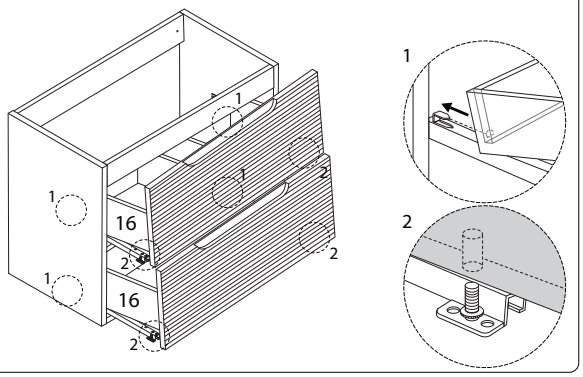

17

N10
M4 x 14 x 4

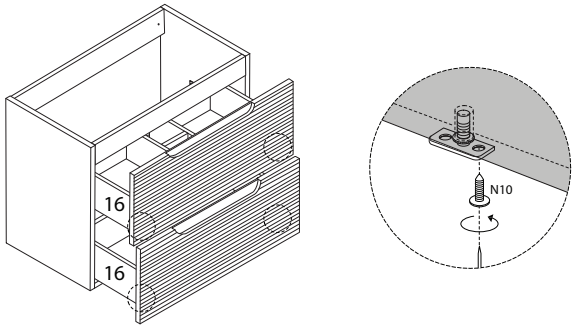

18

N11
M4 x 25 x 8

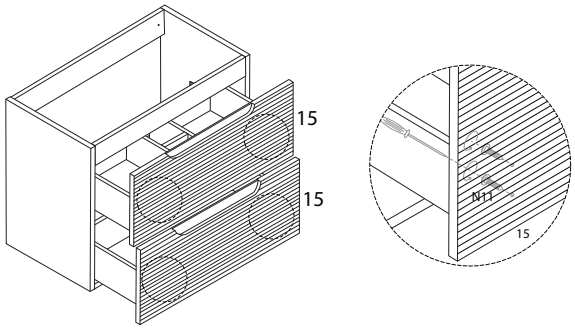

19

N10	N13A
M4 x 14 x 16	x 2

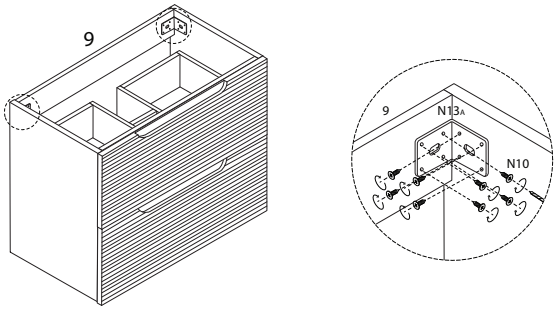

21

1
x 1

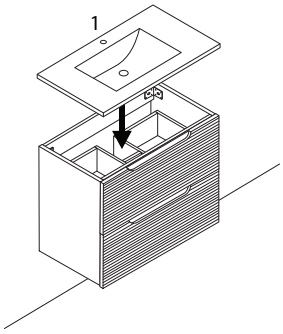

20

N13B	N13C
M6 x 70 x 2	x 2

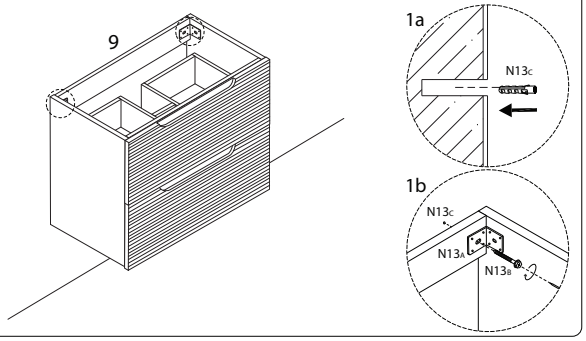

22

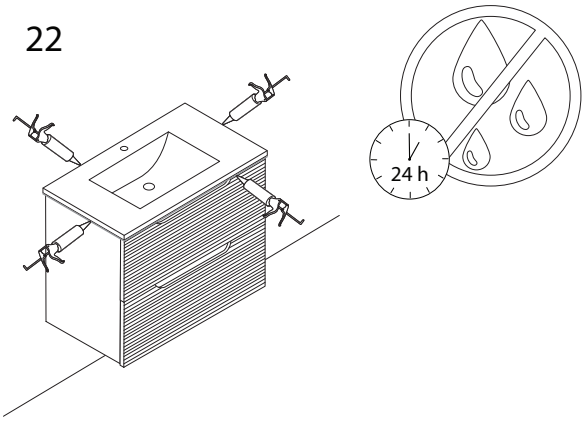

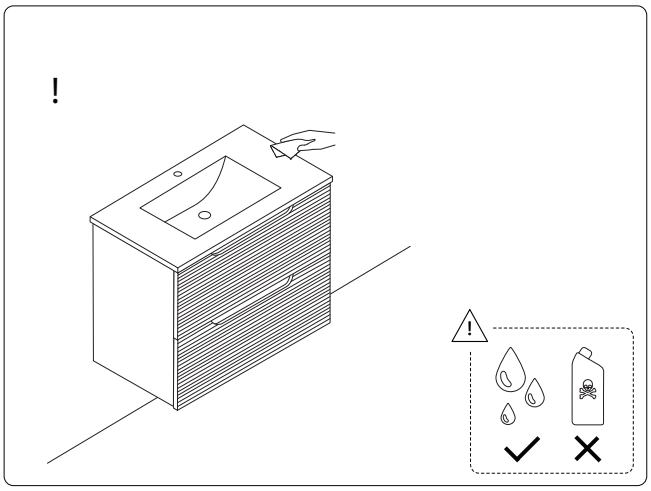

2353/MAKANA/100925/