JOINVILLE

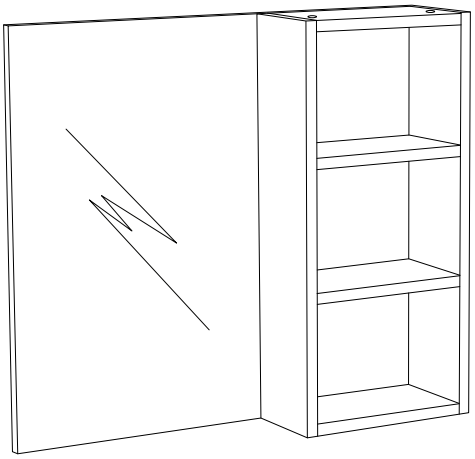

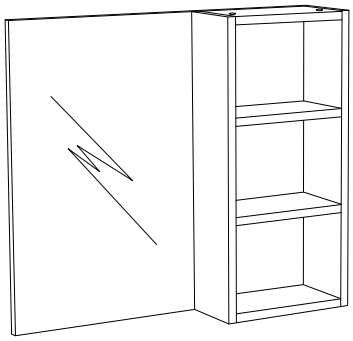

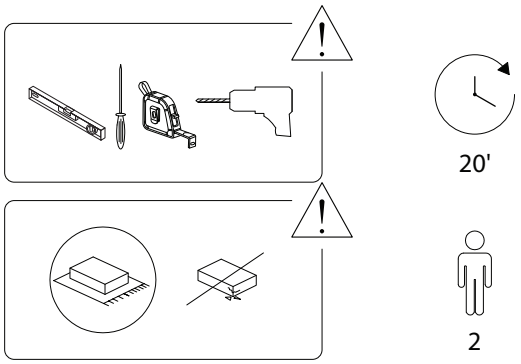

1/8

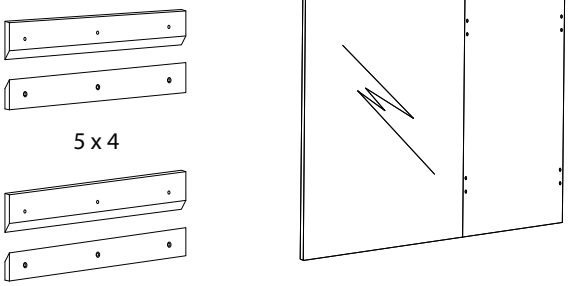

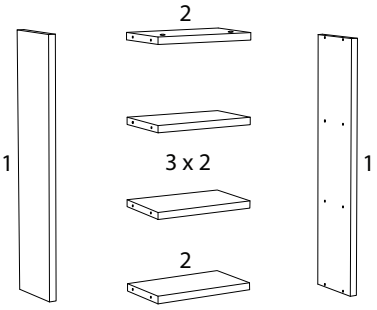

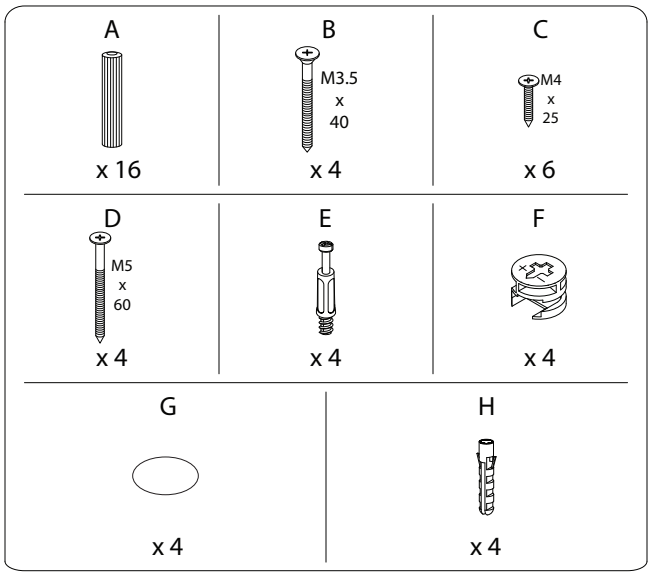

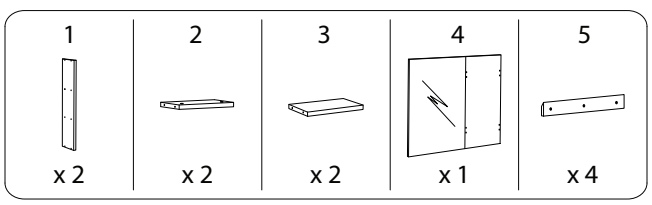

1 x 2

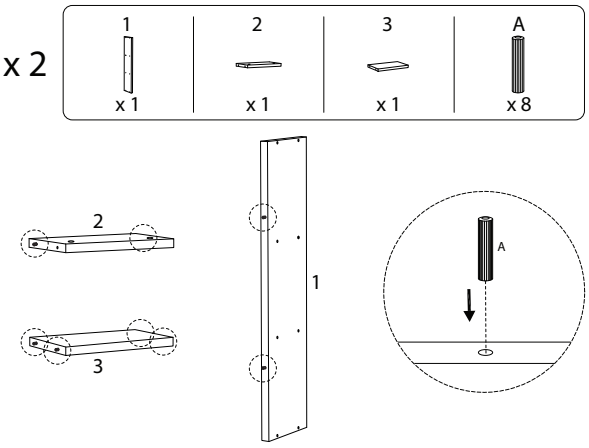

2 x 2

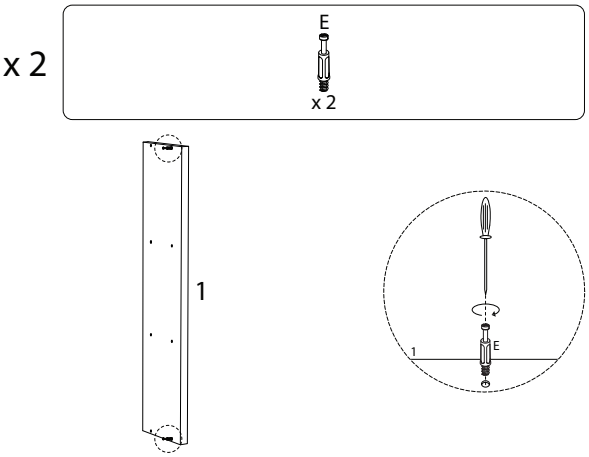

3

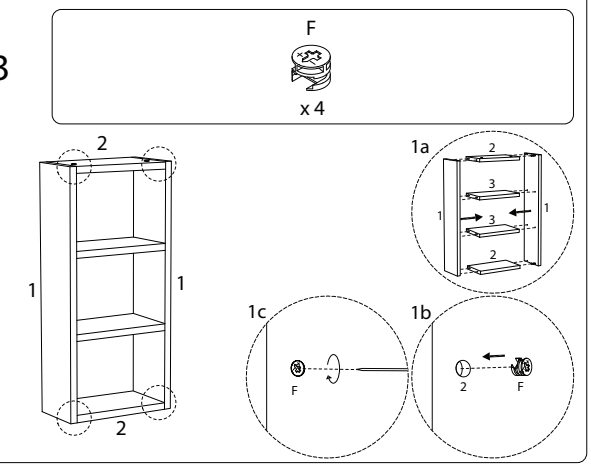

4

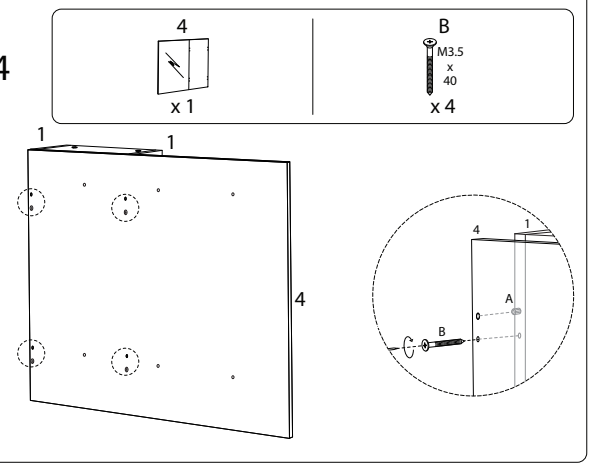

5

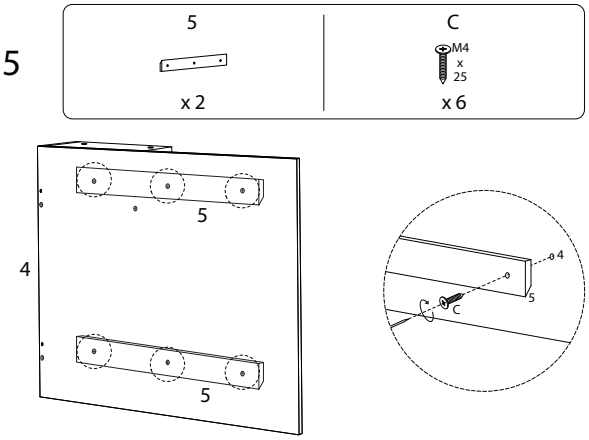

6

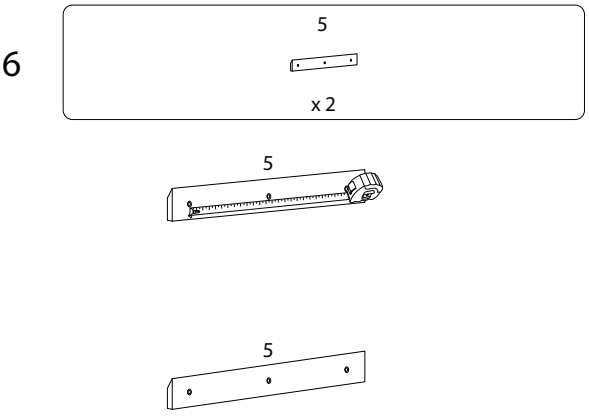

7

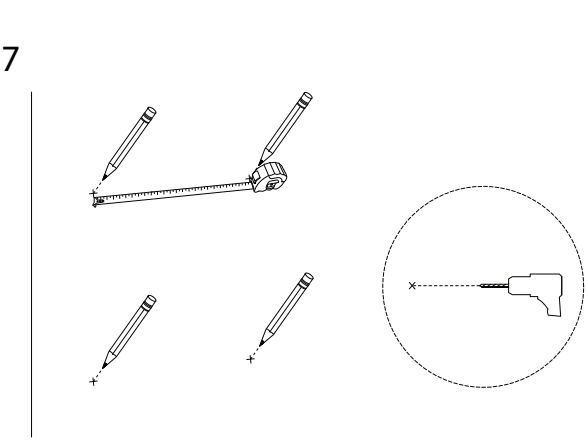

8

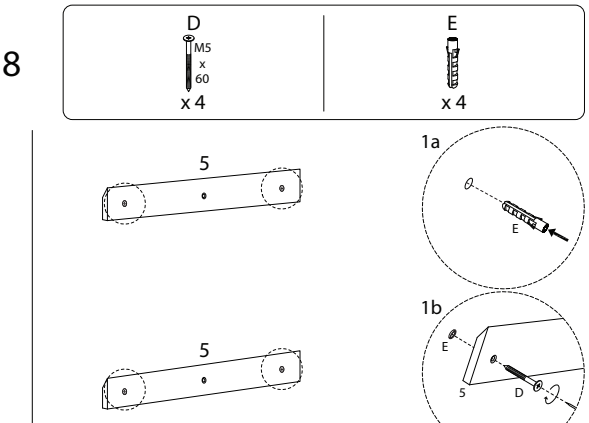

9

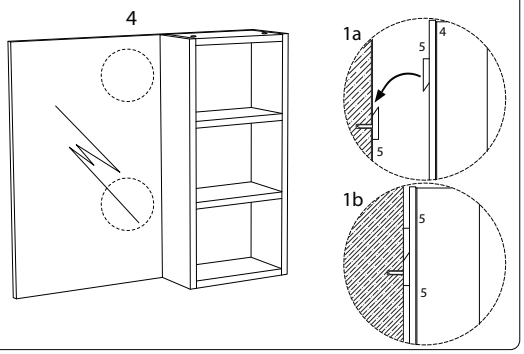

10

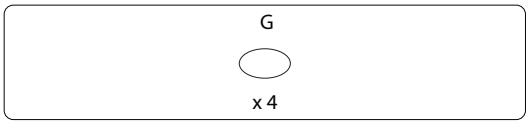

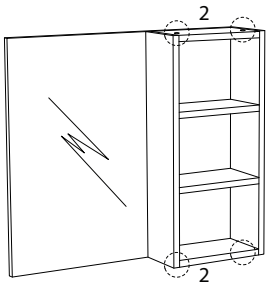

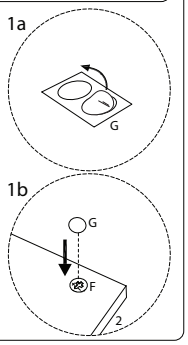

2364/JOINVILLE/130525/