COROICO

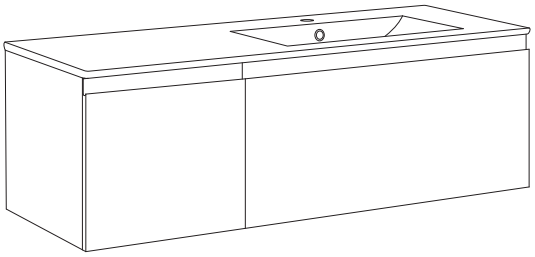

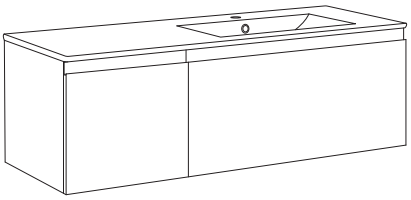

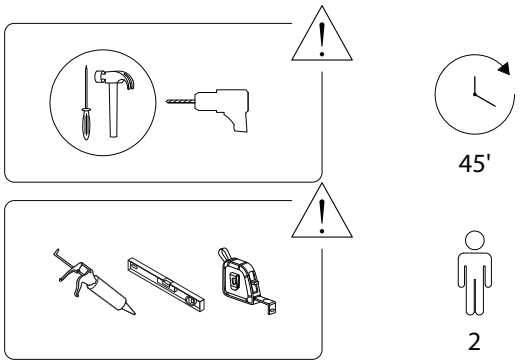

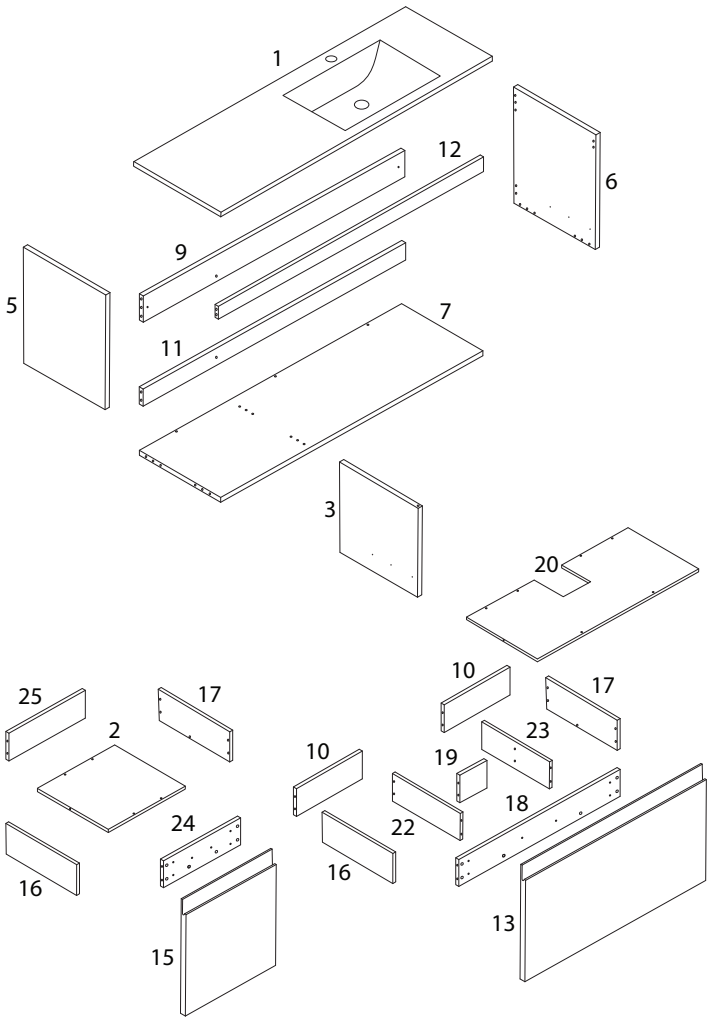

1	2	3	5
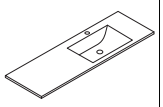			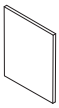
x 1	x 1	x 1	x 1
6	**7**	**9**	**10**
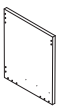	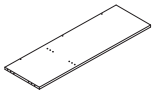	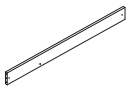	
x 1	x 1	x 1	x 2
11	**12**	**13**	**15**
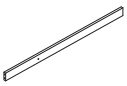	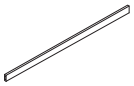		
x 1	x 1	x 1	x 1
16	**17**	**18**	**19**
		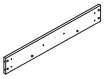	
x 2	x 2	x 1	x 1
20	**22**	**23**	**24**	**25**
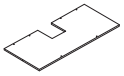				
x 1	x 1	x 1	x 1	x 1

N1	N2	N4
		
x 66	x 66	x 14
N7L	**N7R**	**N10**
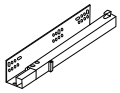	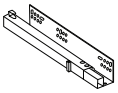	
x 2	x 2	x 32
N11	**N12**	**N13A**
		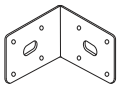
x 8	x 4	x 2
N13B		**N13C**
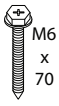		
x 2		x 2

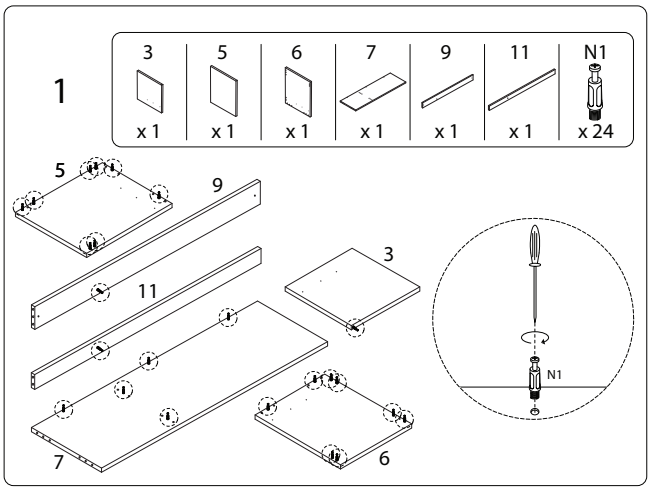

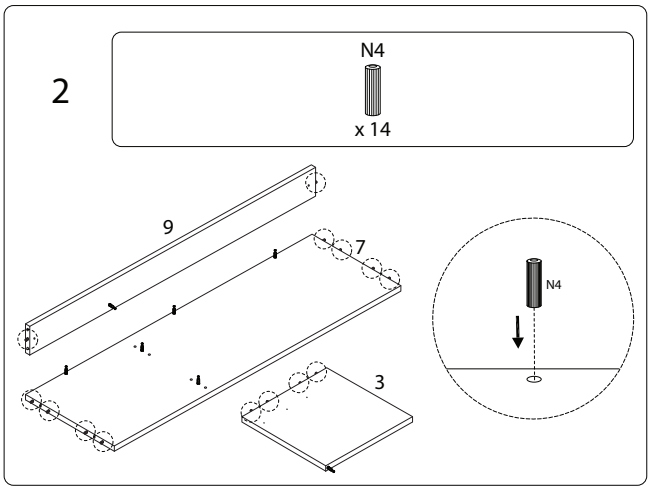

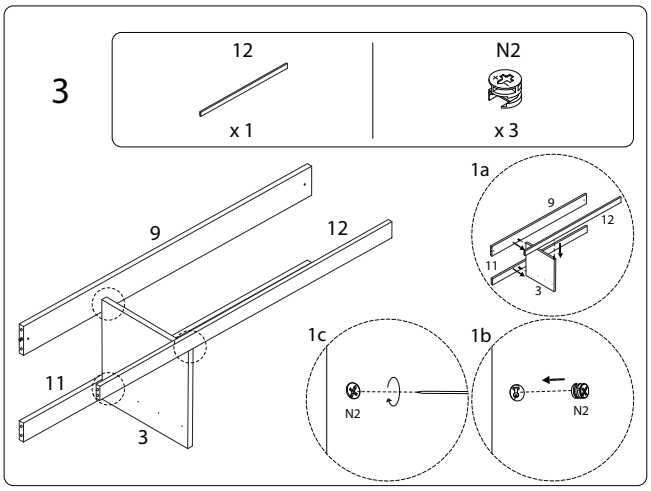

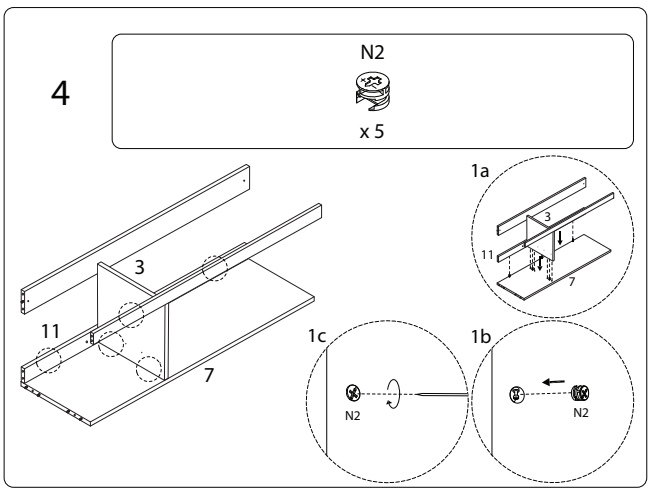

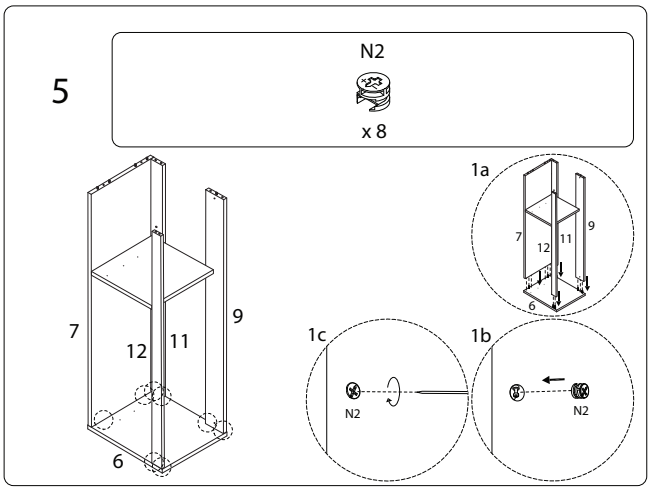

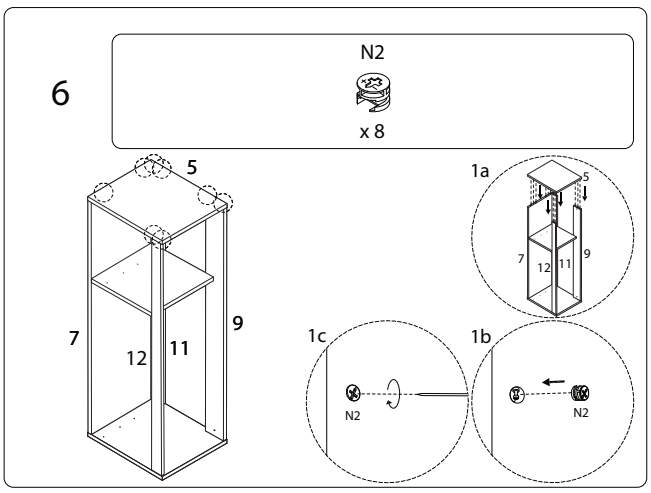

7

$N7_R$	N10
x 2	x 6

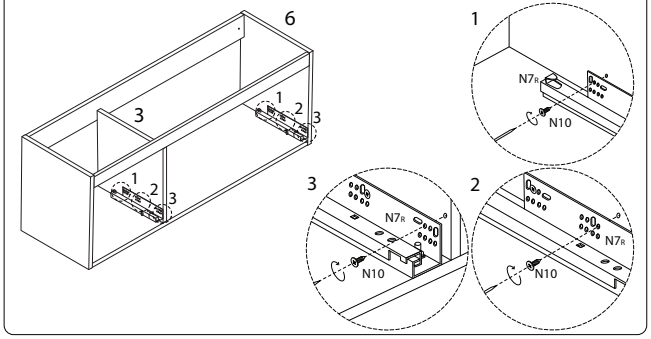

8

$N7_L$	N10
x 2	x 6

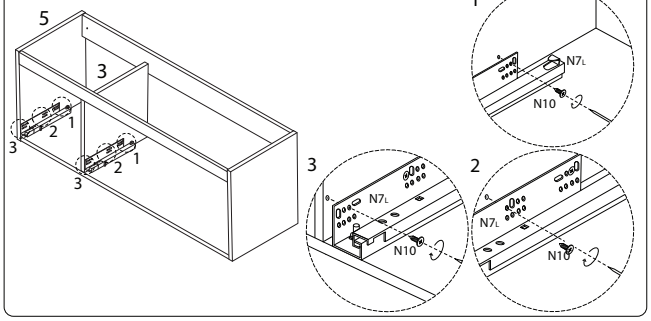

9

2	16	17	18	20	22	23	N1
x 1	x 2	x 2	x 1	x 1	x 1	x 1	x 42

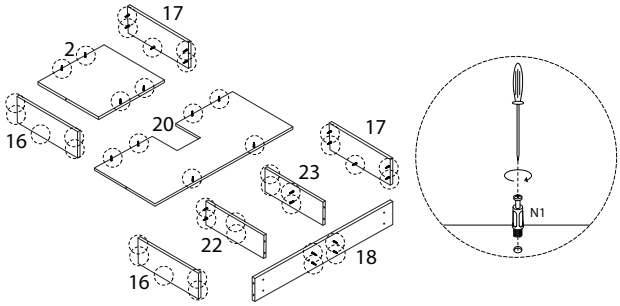

10

19	N2
x 1	x 4

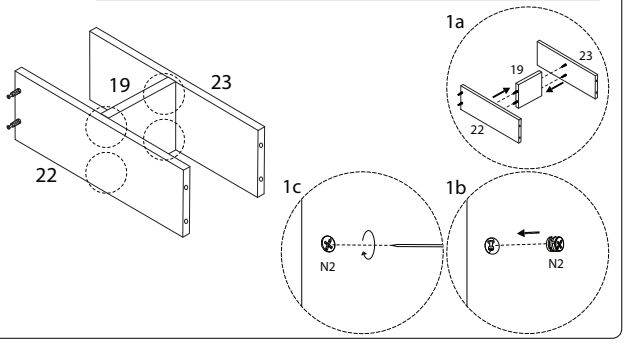

11

10	N2
x 2	x 8

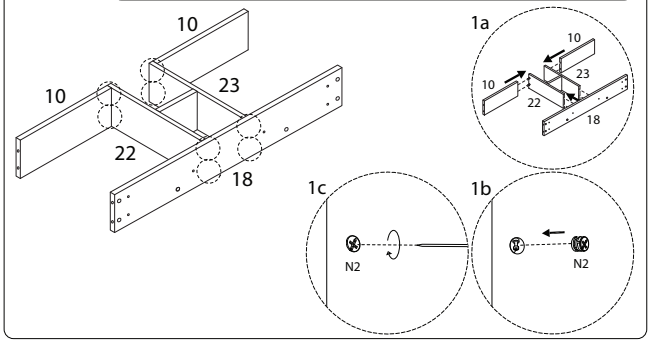

13

N2
x 10

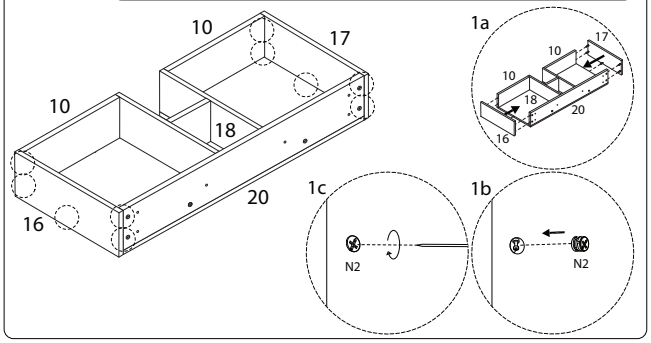

12

N2
x 6

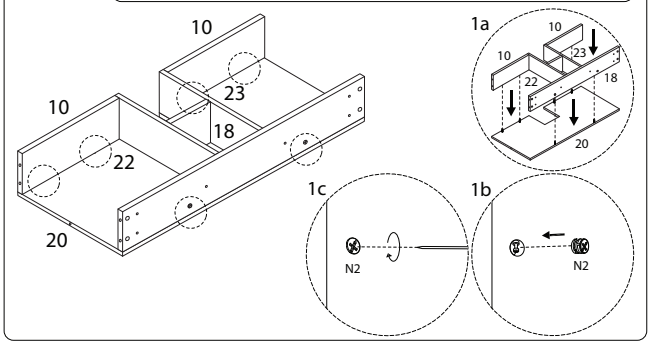

14

24	25	N2
x 1	x 1	x 4

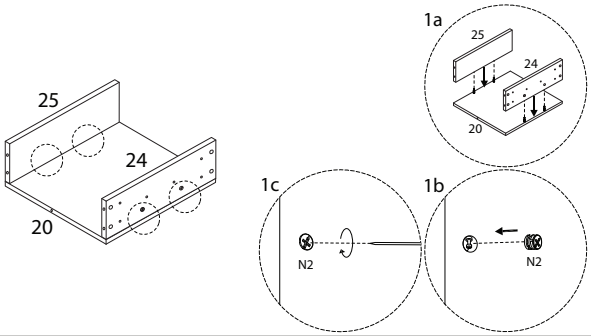

15

N2

x 8

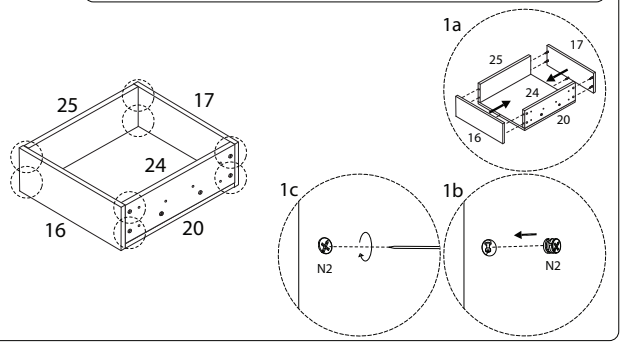

16

13	15	N12
x 1	x 1	x 4

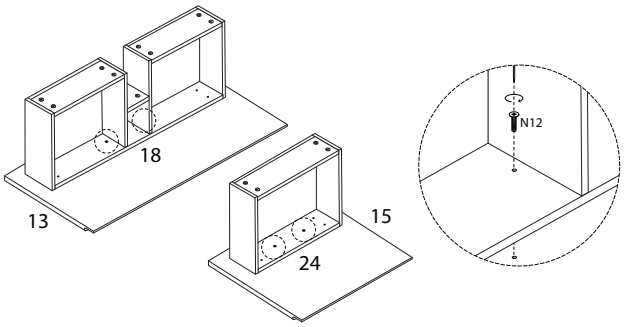

17

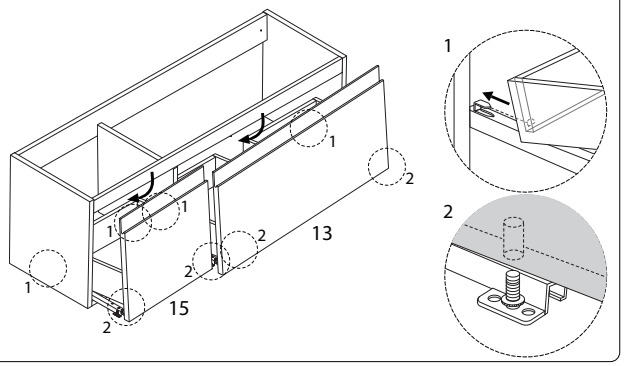

18

N10

x 4

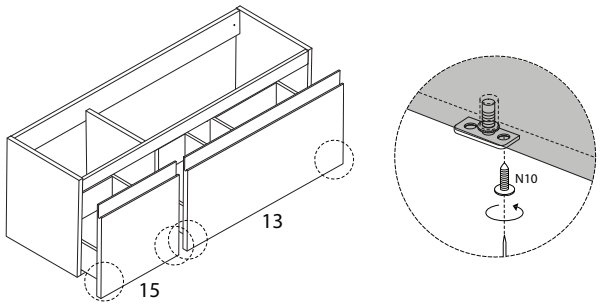

19

N11

x 8

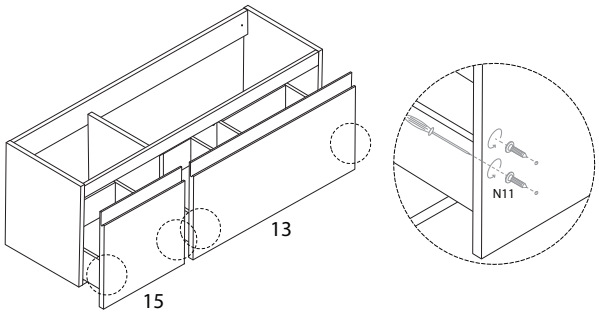

20

N10	N13A
x 16	x 2

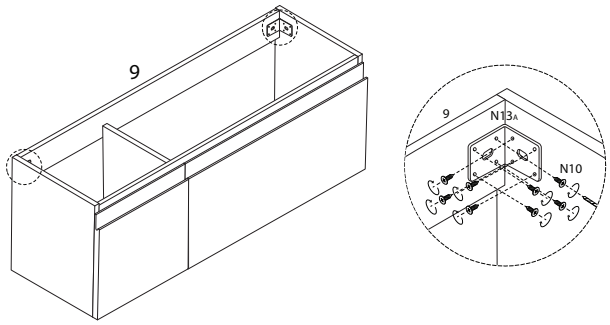

21

N13B	N13C
x 2	x 2

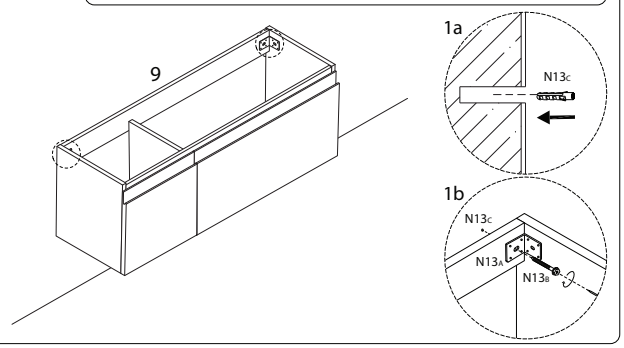

22

1

x 1

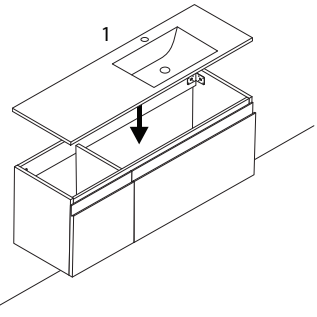

23

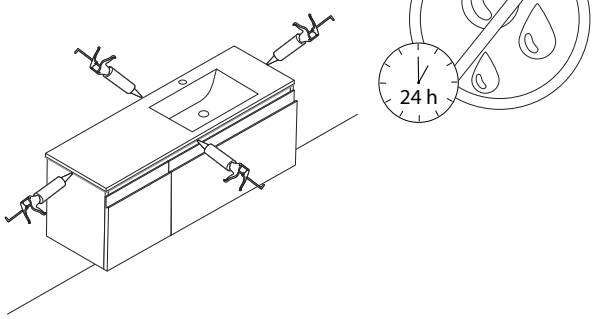

!

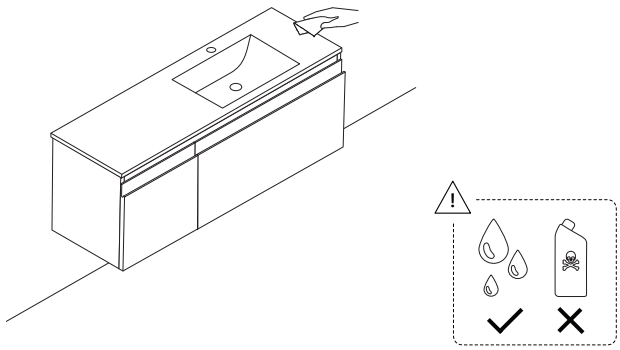

2353/COROICO/080925/