# KIVVIK

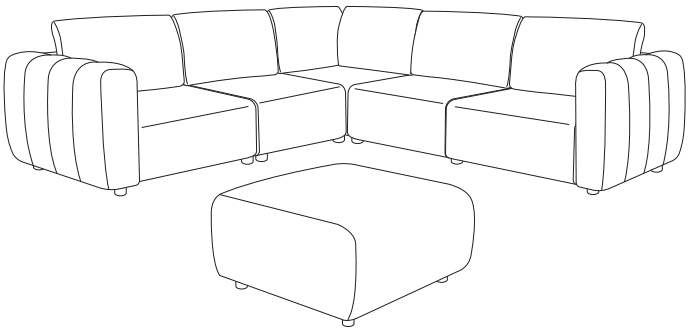

1/18

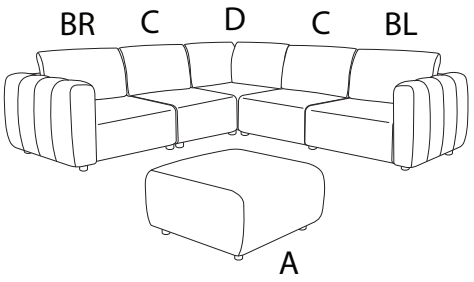


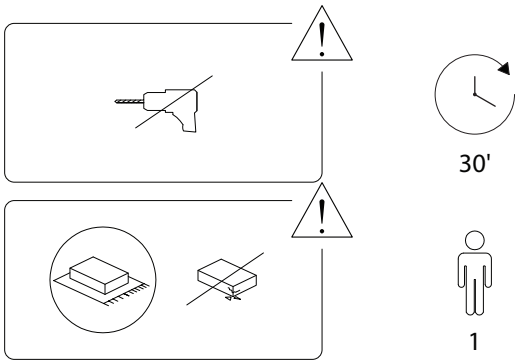


2/18

2650/KIVVIK/240226/

A

1

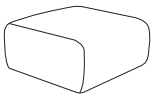

x 1

1

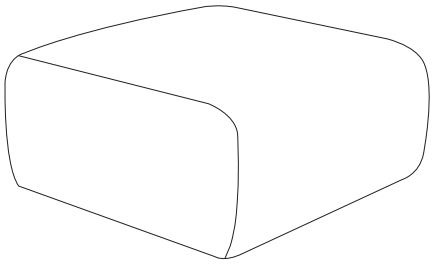



A x 4



A



x 4

3/18

2650/KIVVIK/240226/

!

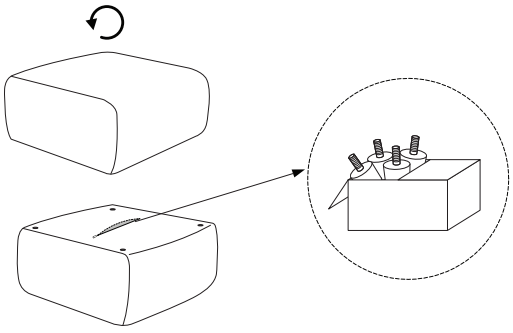

!

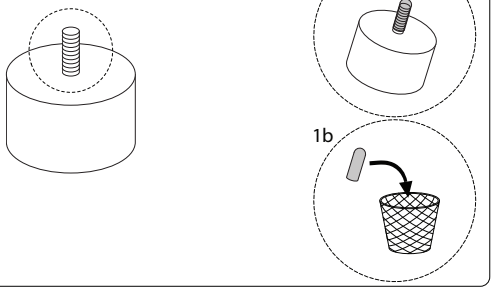


4/18

2650/KIVVIK/240226/

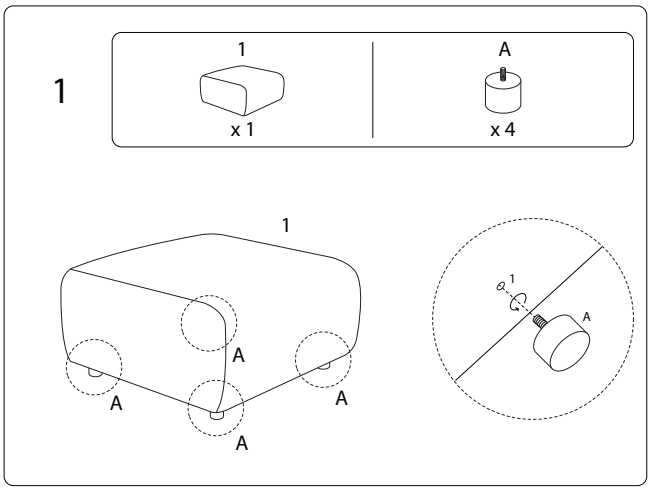
1
1
x 1
A
x 4
1
A
A
A
A
1
A







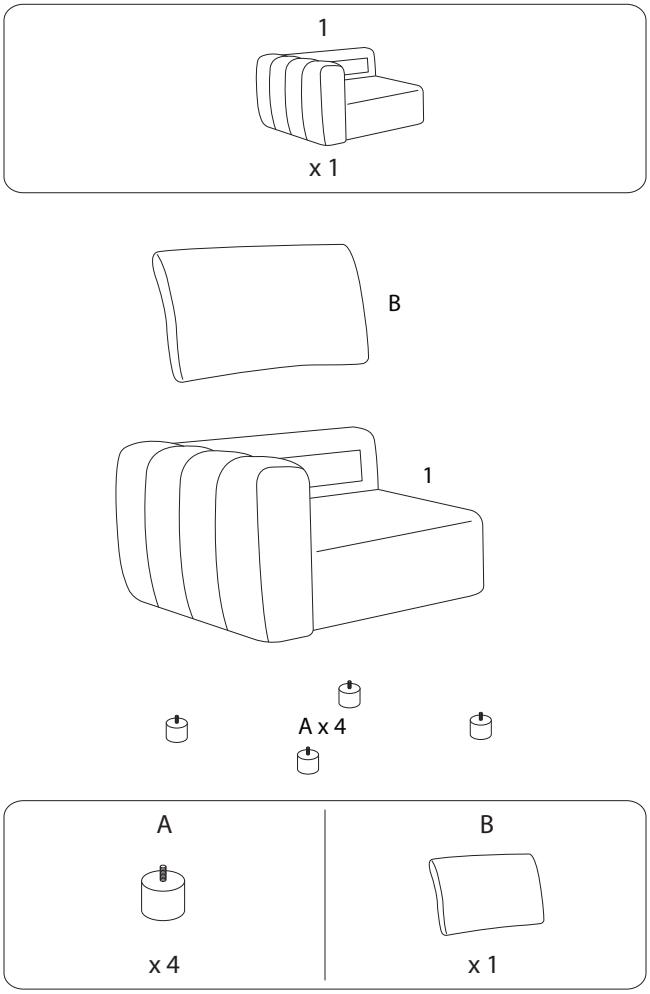
1
x 1
B
1
A x 4
A
x 4
B
x 1





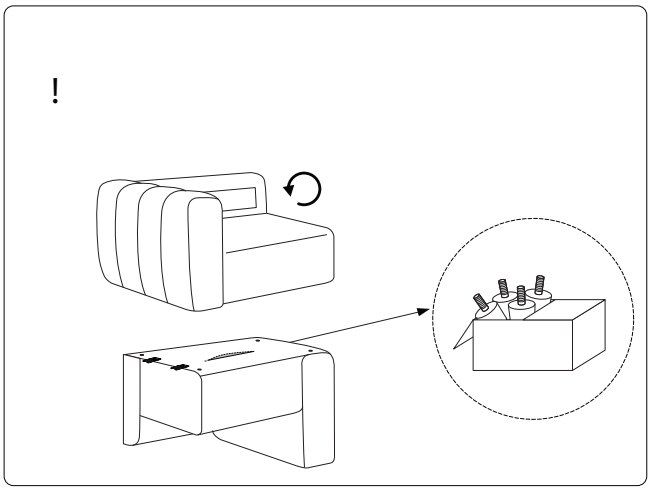
!

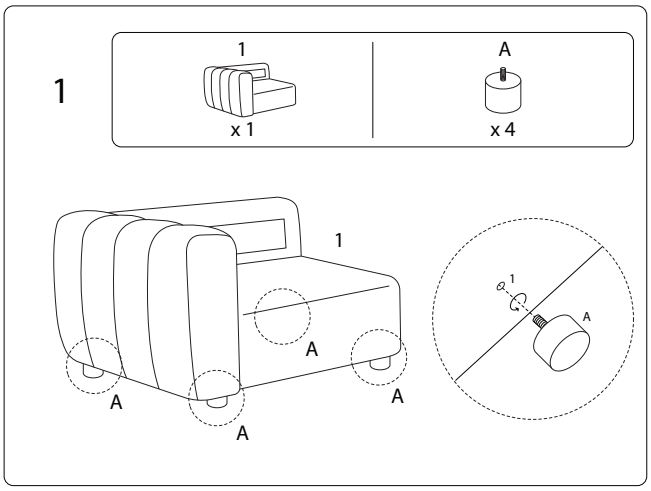
1
1
x 1
A
x 4
1
A
A
A
A
1
A

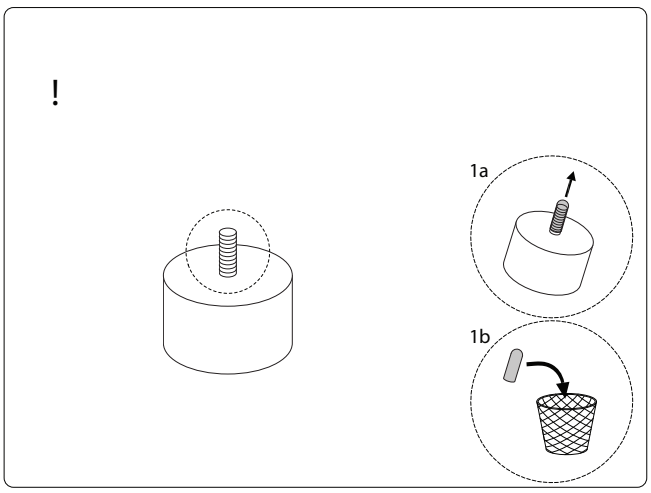
!
1a
1b





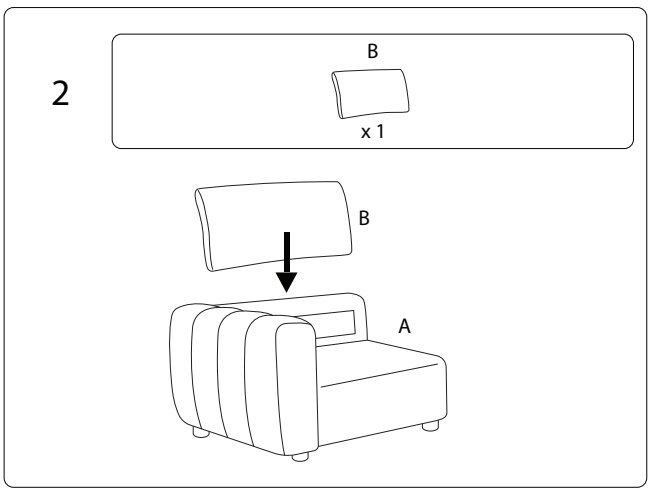
2
B
x 1
B
A

BL

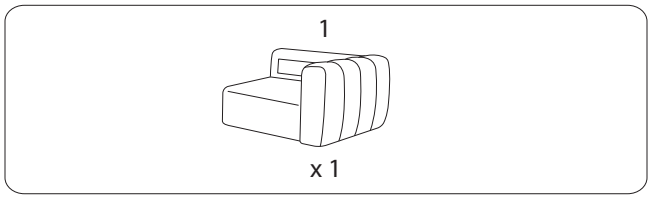
1
x 1

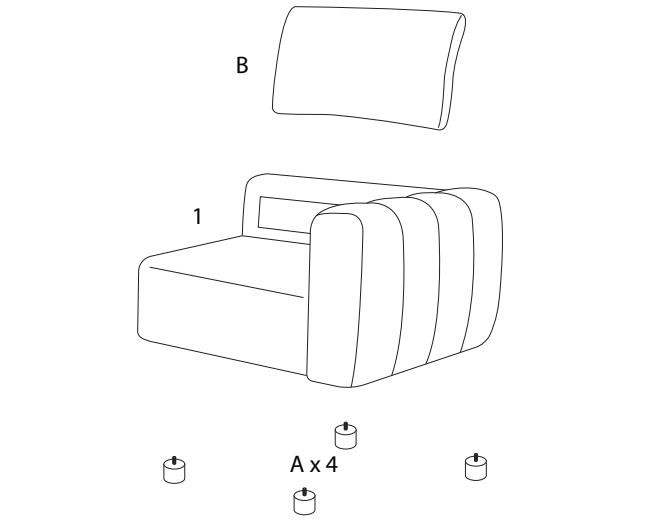
B
1
A x 4

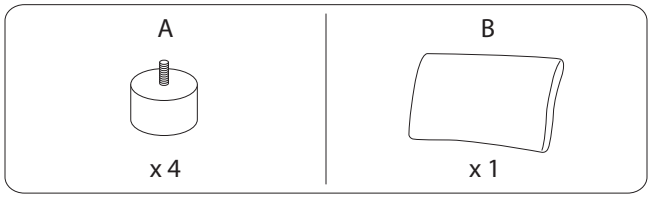
A
x 4
B
x 1





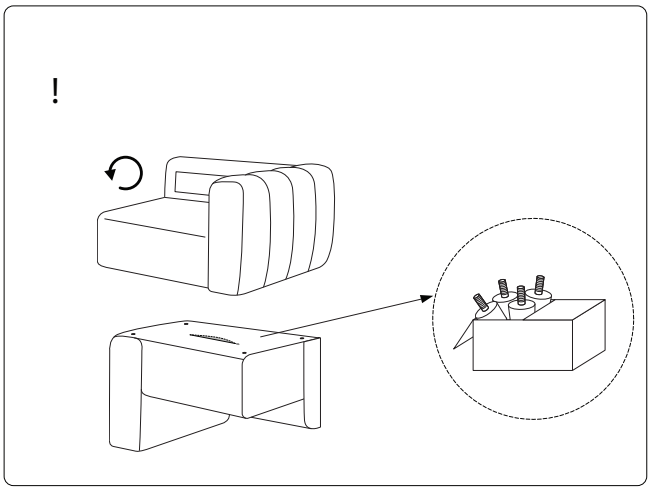
!

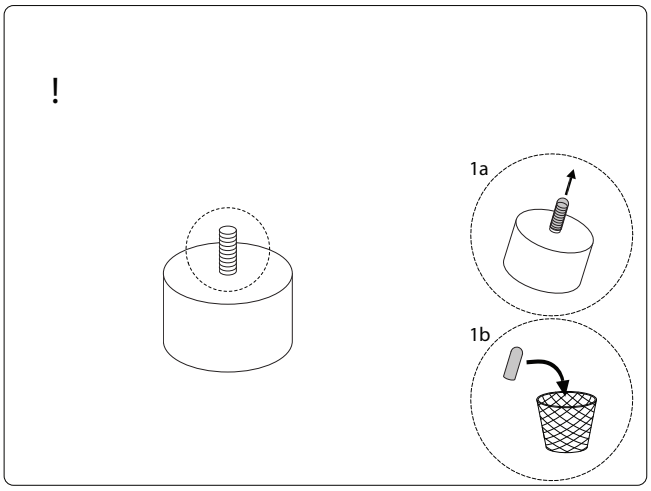
!
1a
1b





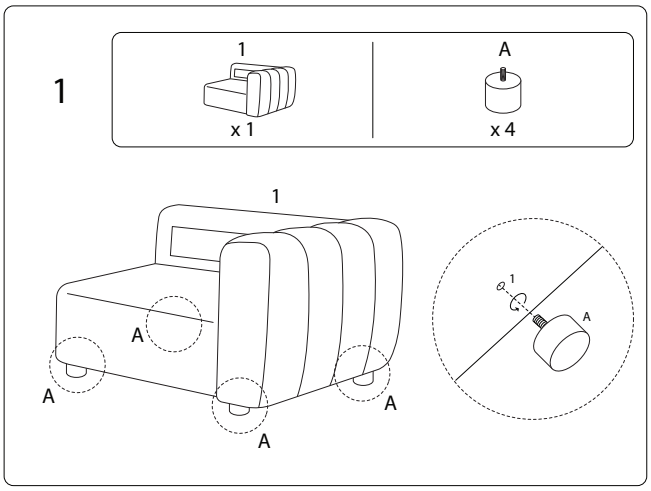
1
1
x 1
A
x 4
1
A
A
A
A

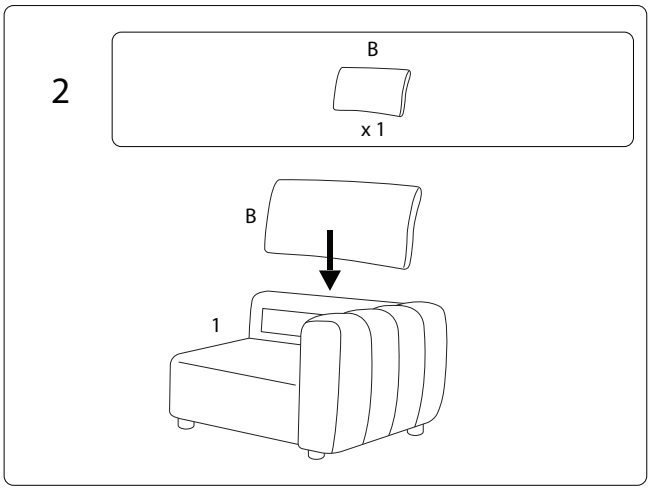
2
B
x 1
B
1





C x 2

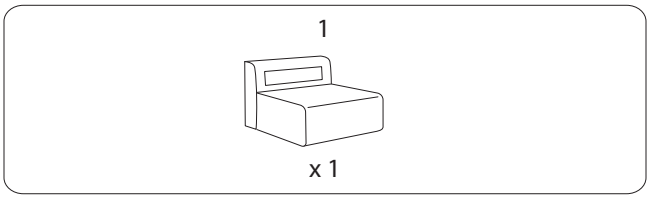
1
x 1

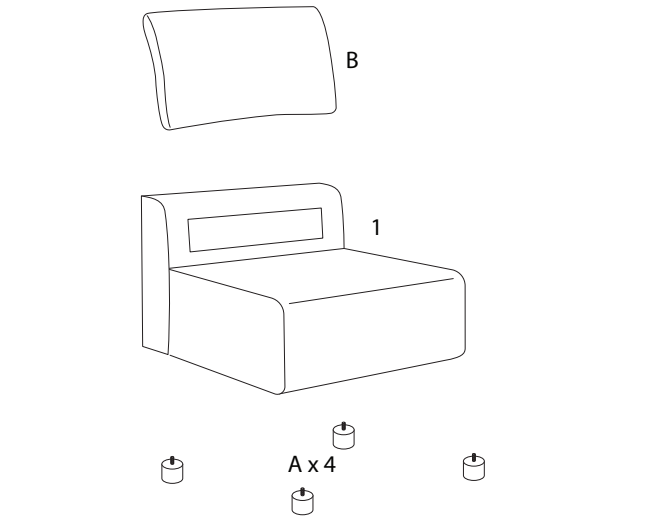
B
1
A x 4

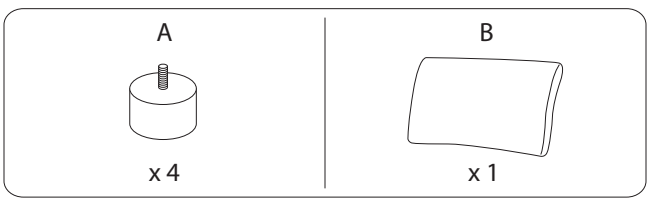
A
x 4
B
x 1

!

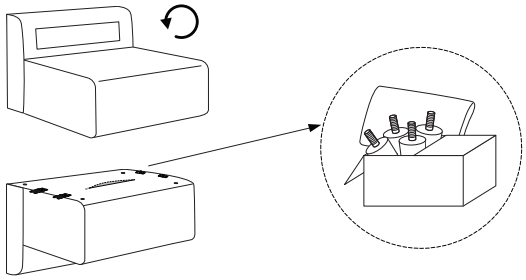

1

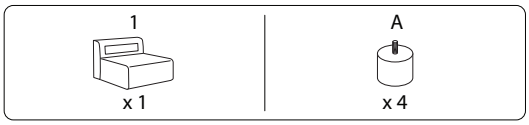


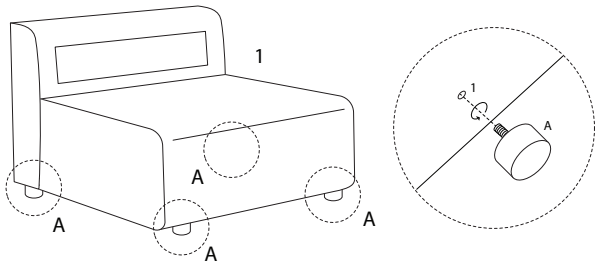


!

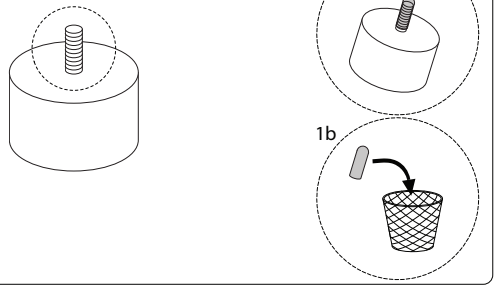






2

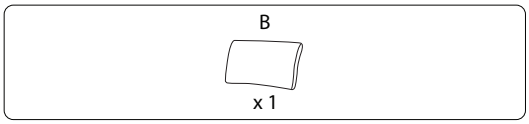


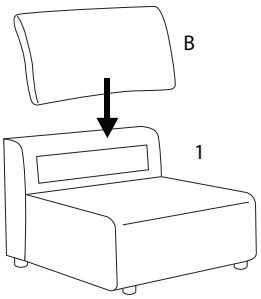






D

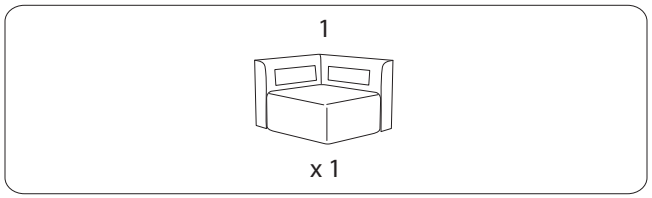


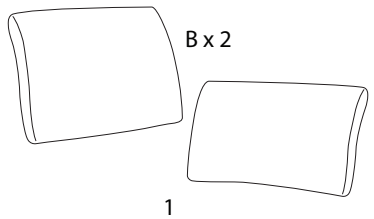


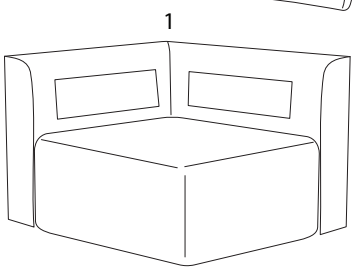


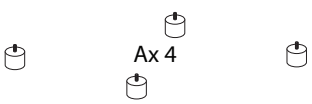


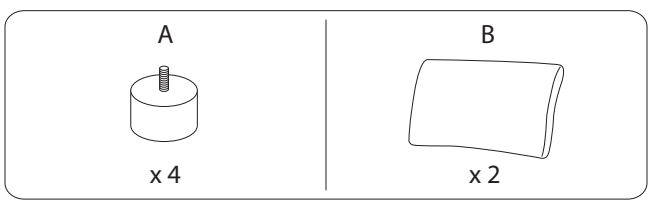






!

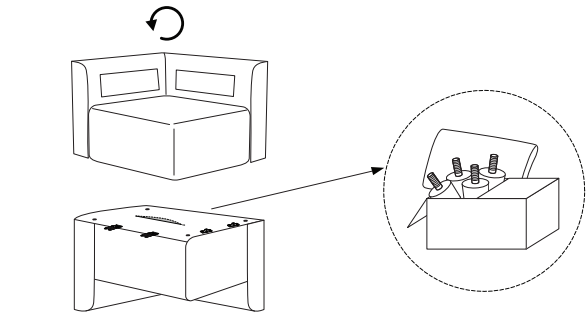

!

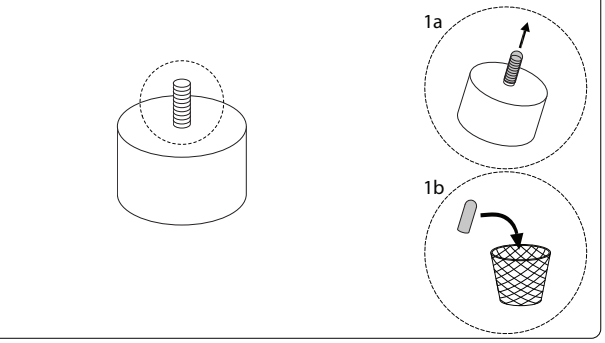

1

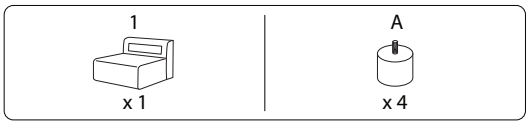


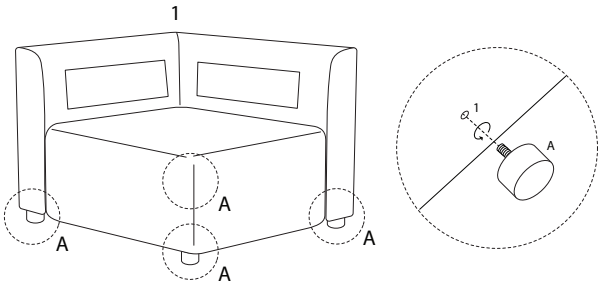


2

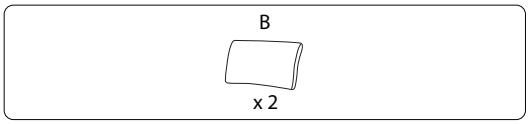


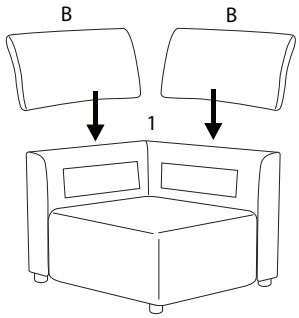






!

