JERSLEV

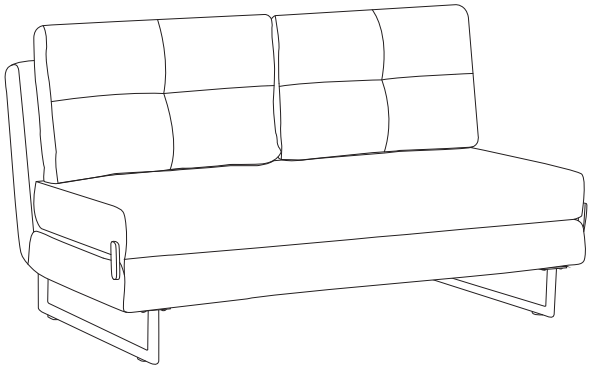

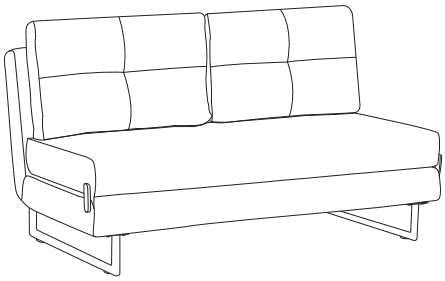

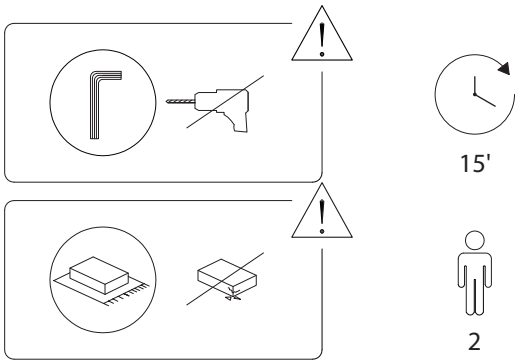

1/4

1	2	3
x 2	x 1	x 2

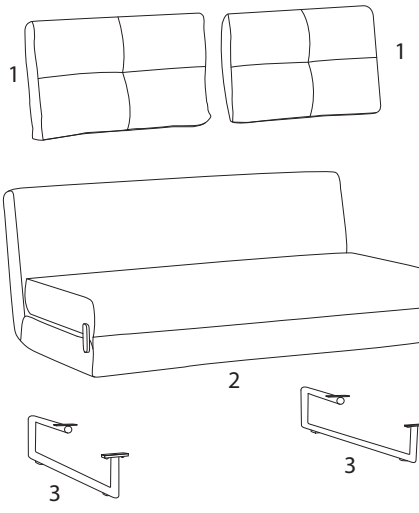

A	B	C
x 1	x 8	x 8

2/4

1

2	3	A	B	C
x 1	x 2	x 1	M8 x 30 x 8	x 8

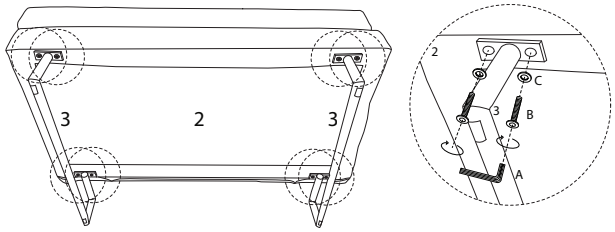

2

1
x 2

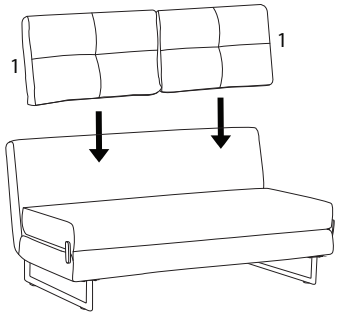

3/4

!

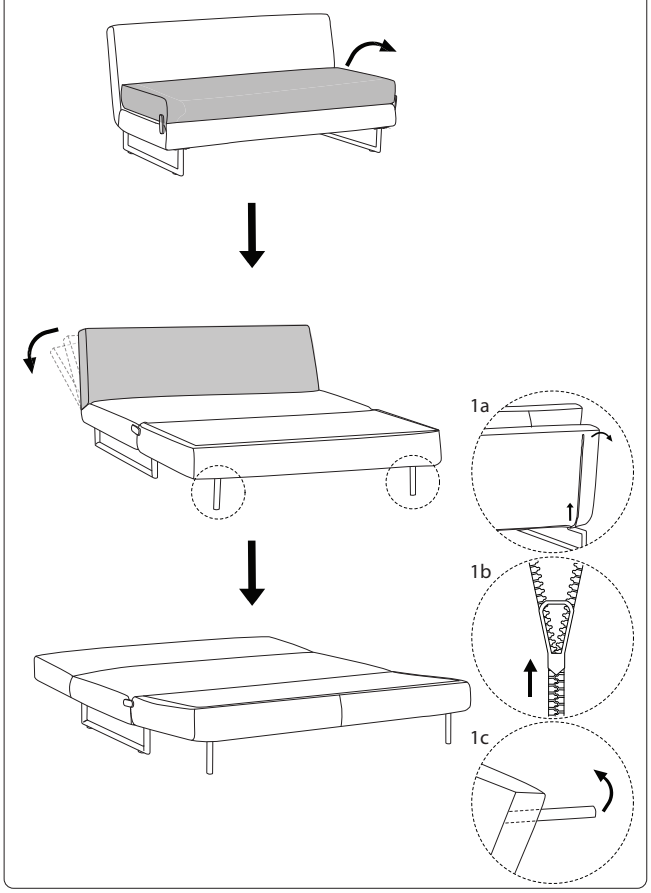

1252/JERSLEV/240925/