SARDIS



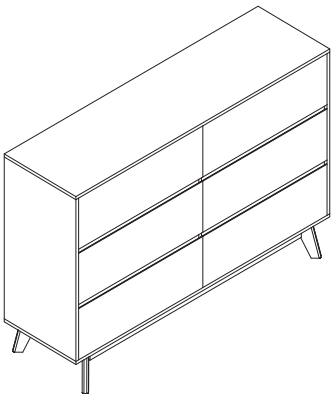

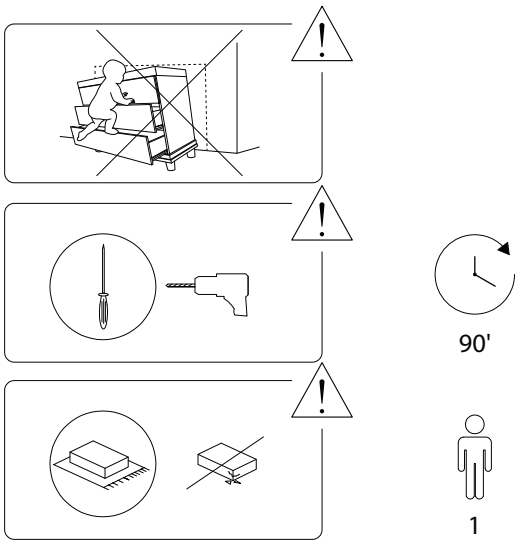

1477/SARDIS/210225/

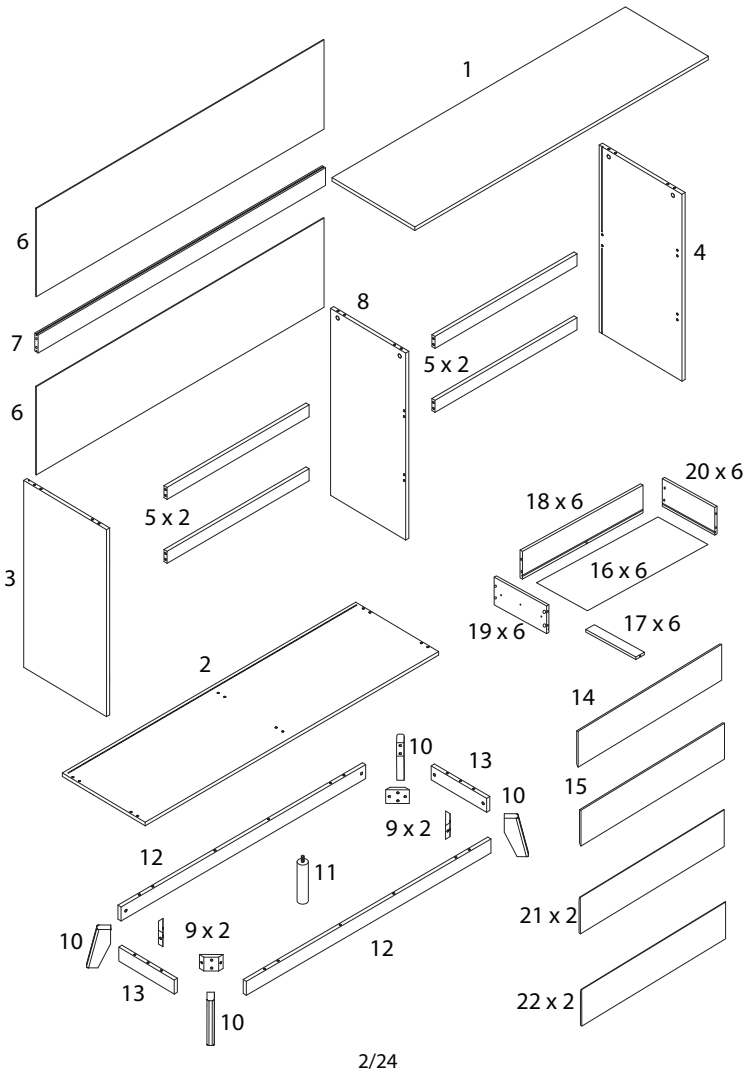

1477/SARDIS/210225/

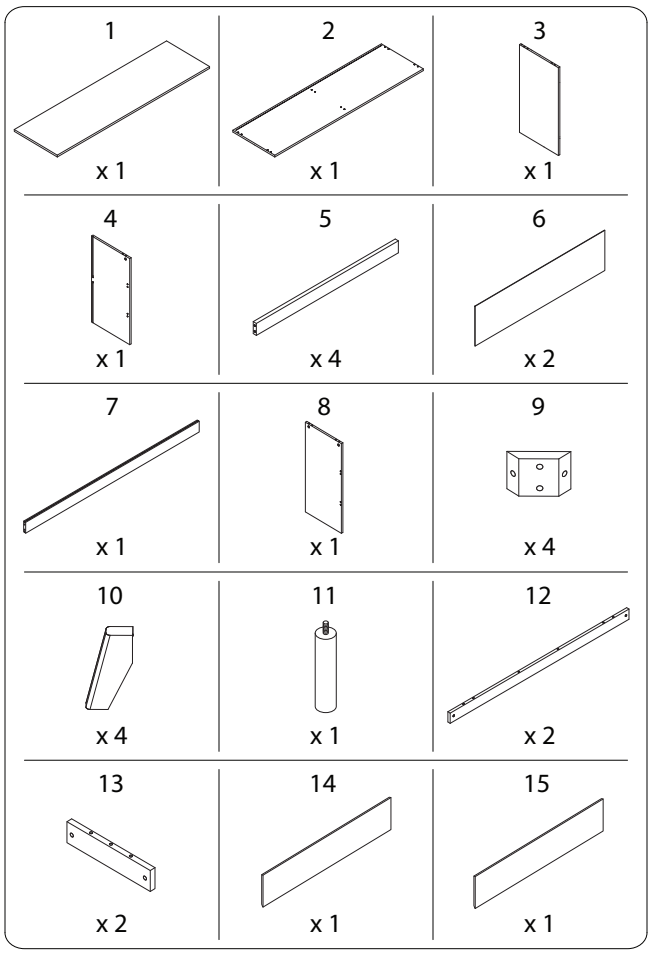

1477/SARDIS/210225/

16	17	18
x 6	x 6	x 6
19	20	21
x 6	x 6	x 2
22		
x 2		

A	B	C	D
x 41	x 41	x 28	x 4
E	F	G	H
M4 x 35	M6 x 65	M3 x 12	M3 x 16
x 36	x 8	x 72	x 12
J_1	J_2	J_3	J_4
M2 x 10		M4 x 35	
x 2	x 2	x 2	x 2
K	L	M	N
x 1	x 12	M4 x 25	M4 x 45
		x 8	x 10
U			
x 12			

!

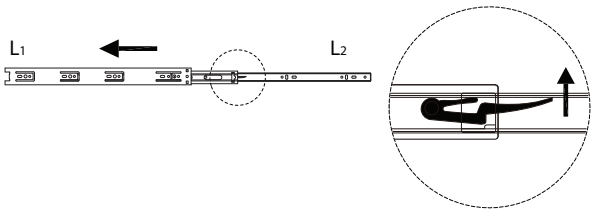

2

8	L_1	G
x 1	x 6	M3 x 12
		x 18

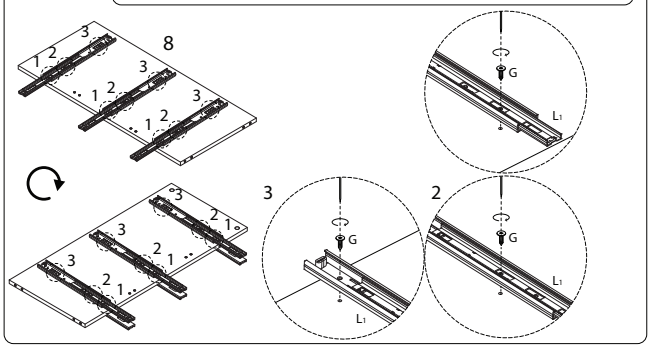

1

3	4	L_1	G
x 1	x 1	x 6	M3 x 12
			x 18

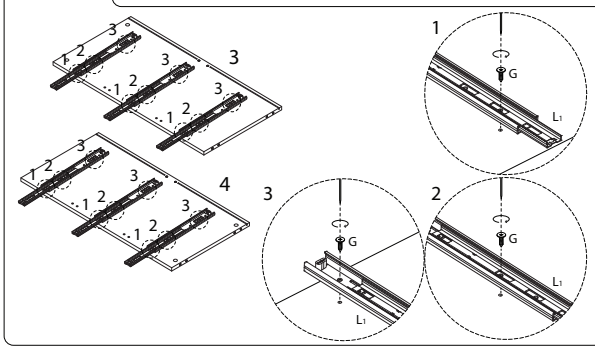

3

7	A
x 1	x 1

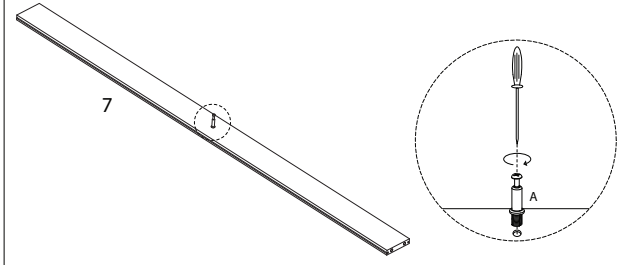

4

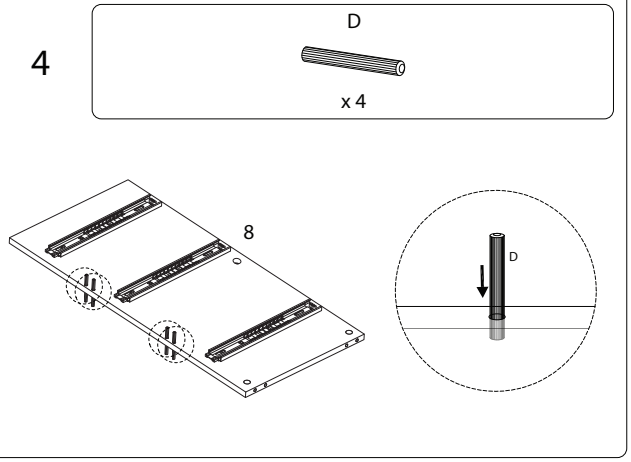

6

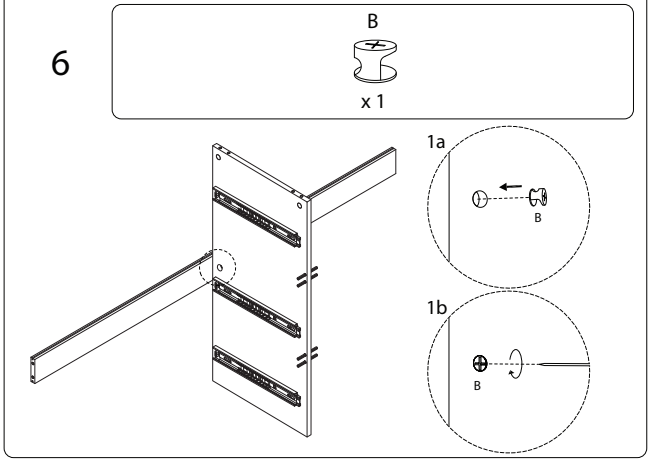

5

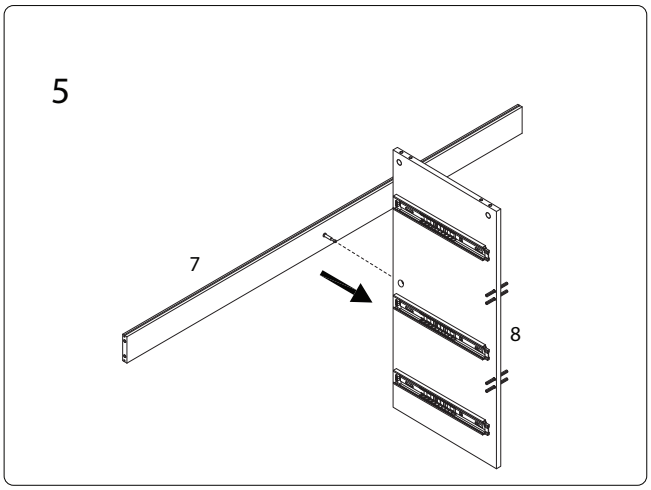

7

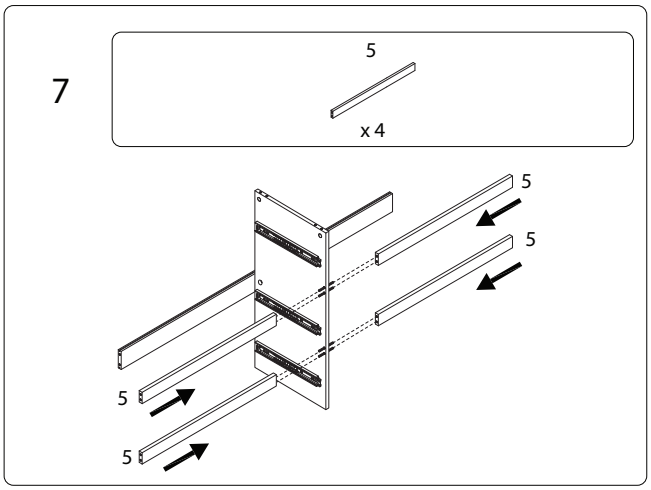

8

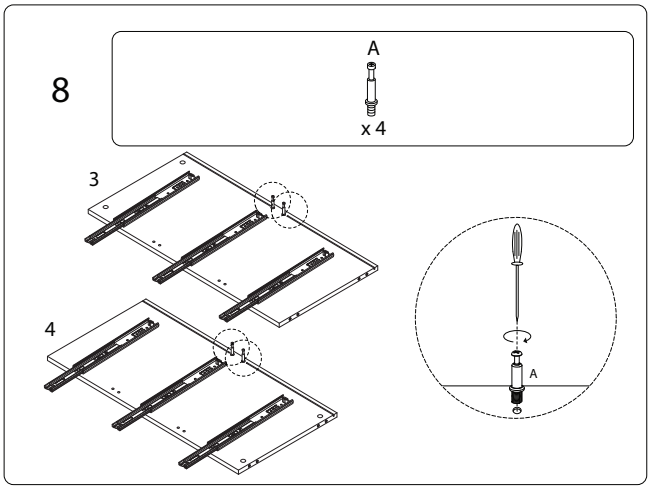

10

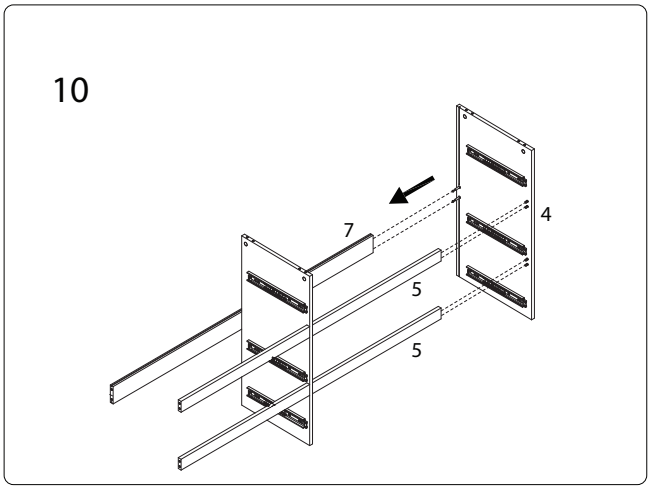

9

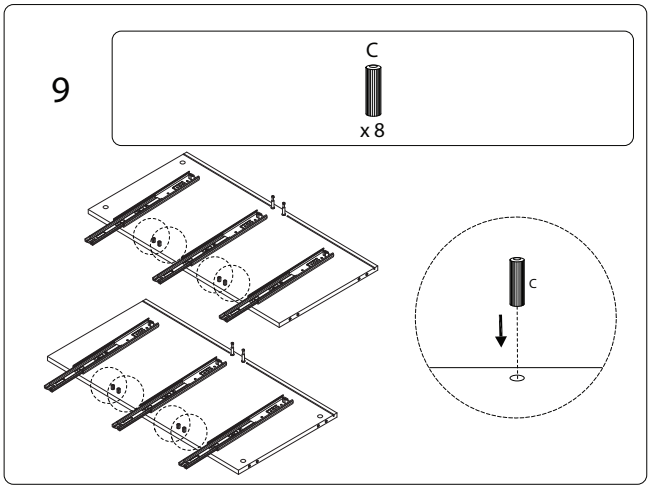

11

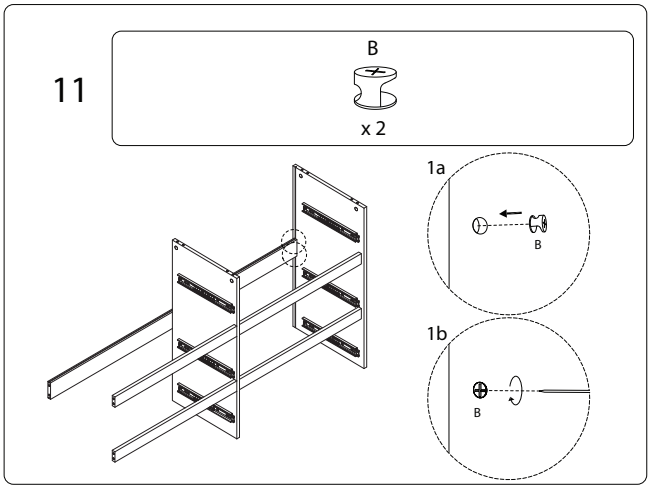

12

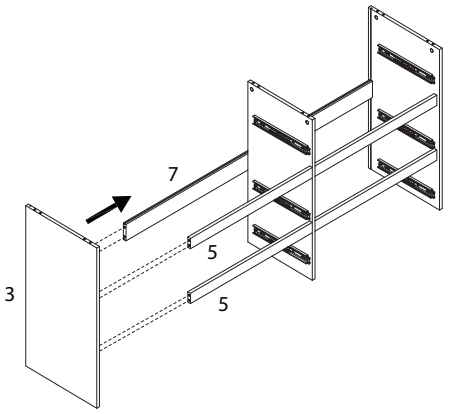

13

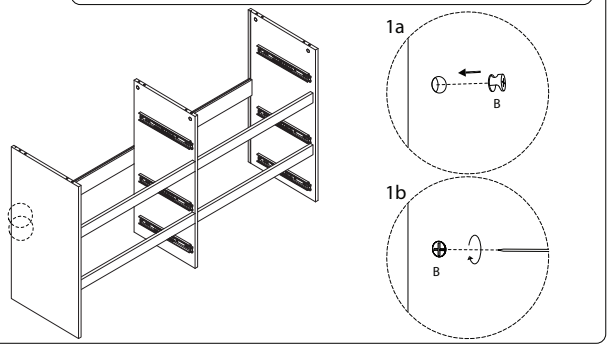

14

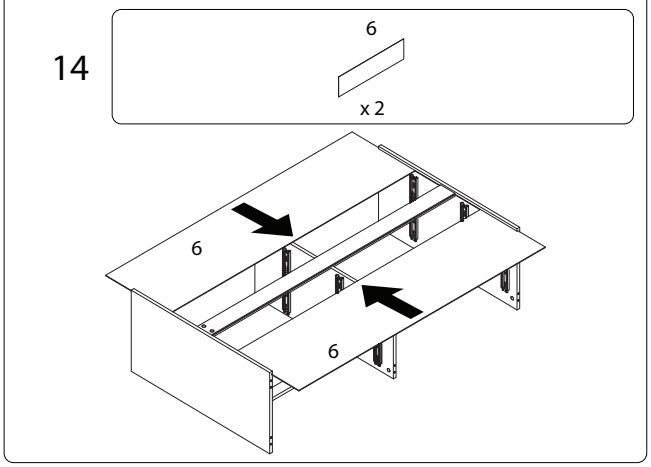

15

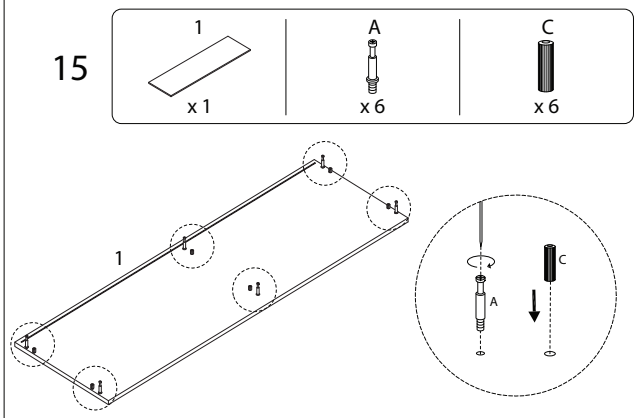

16

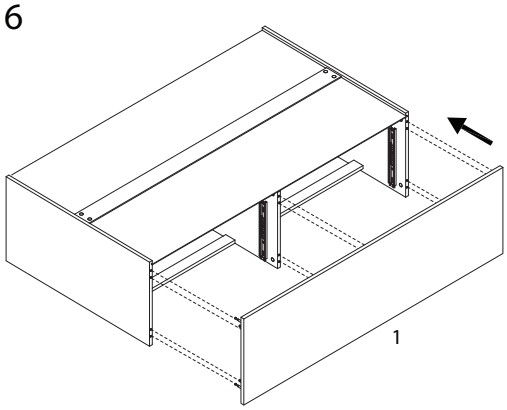

17

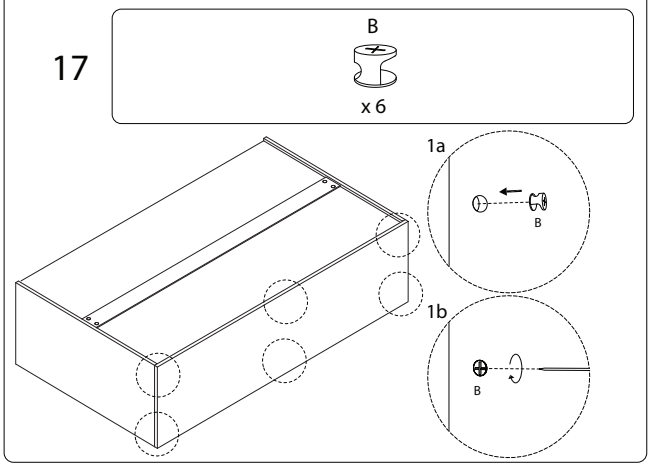

18

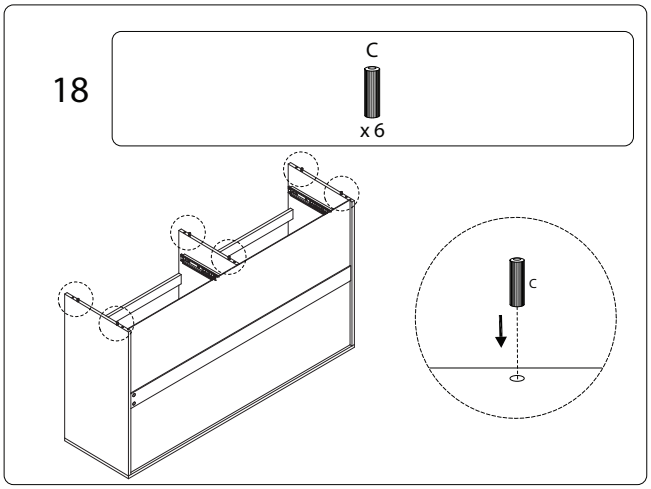

19

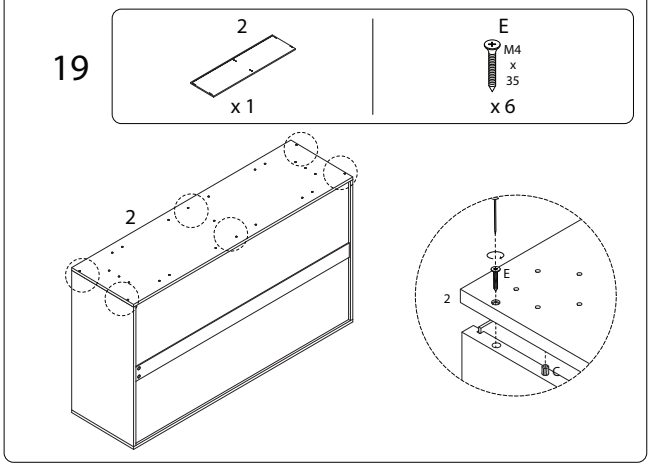

20

C
x 8

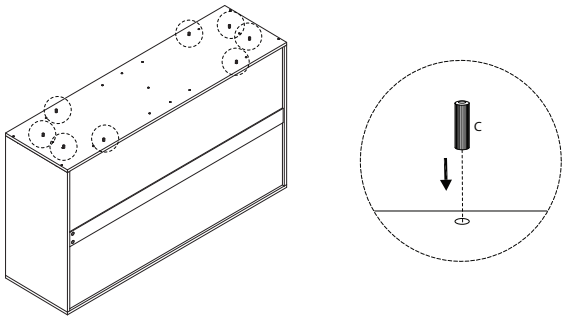

21

9	12	13	M
x 4	x 2	x 2	M4 x 25 x 8

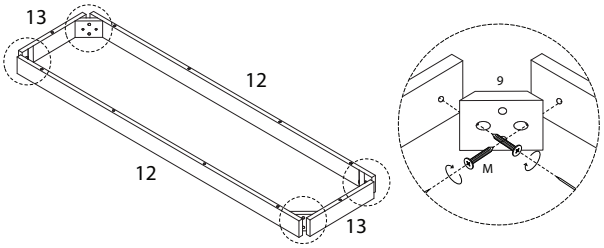

16/24

1477/SARDIS/210225/

22

10	F
x 4	M6 x 50 x 8

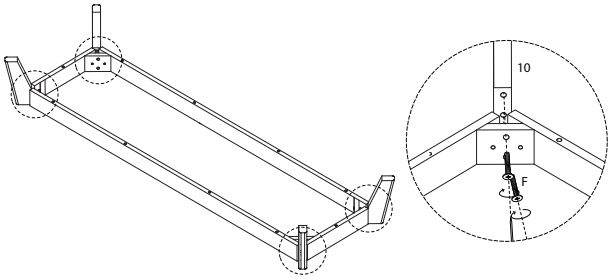

23

N
M4 x 45
x 10

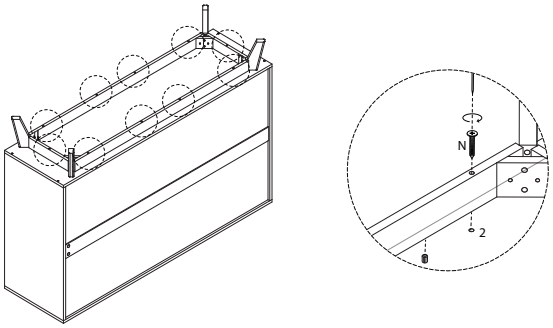

17/24

1477/SARDIS/210225/

24

11	K
x 1	x 1

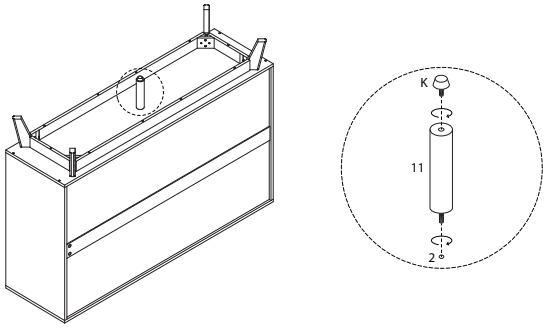

26 x 6

18	19	20	E
x 1	x 1	x 1	M4 x 35 x 4

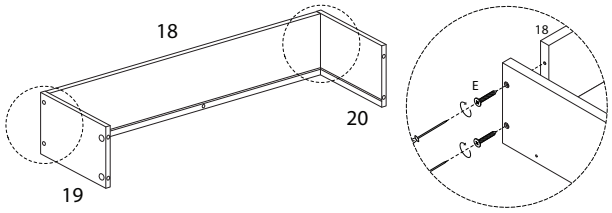

25

H	U
M3 x 16 x 12	x 12

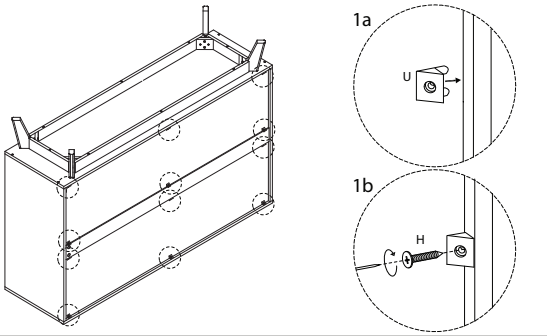

18/24

1477/SARDIS/210225/

27 x 6

17	E
x 1	M4 x 35 x 1

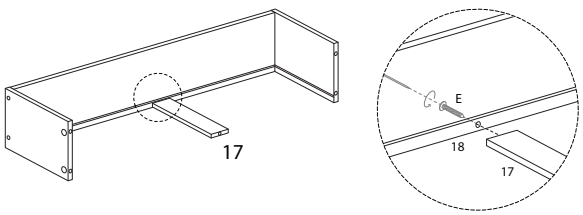

19/24

1477/SARDIS/210225/

28 x 6

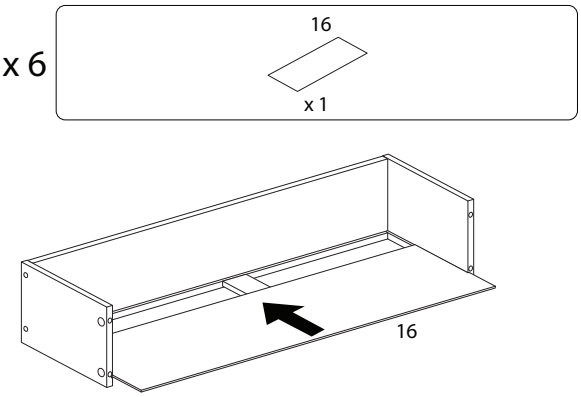

30 x 2

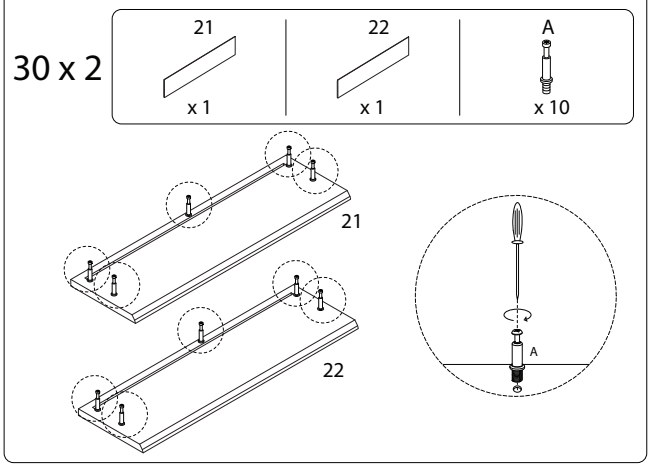

29

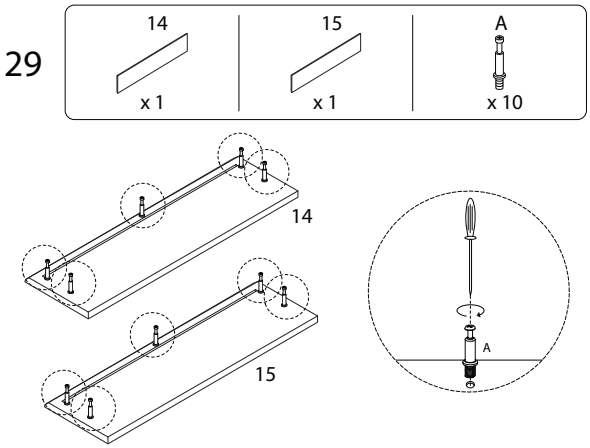

31

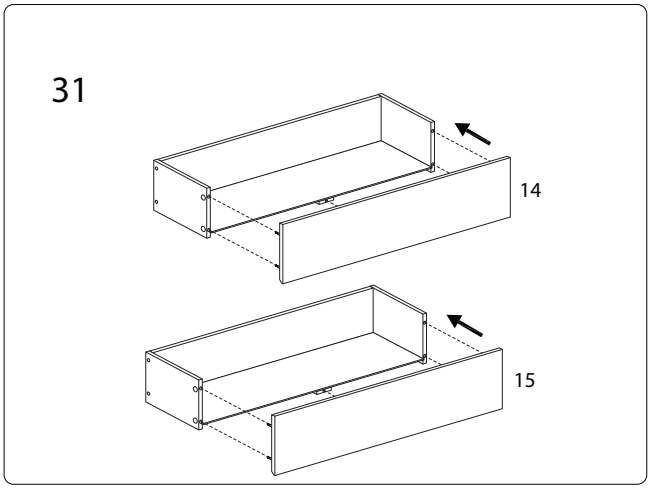

1477/SARDIS/210225/

1477/SARDIS/210225/

32 x 2

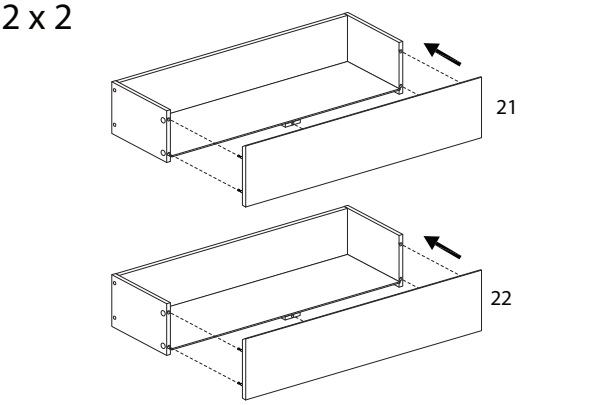

34 x 6

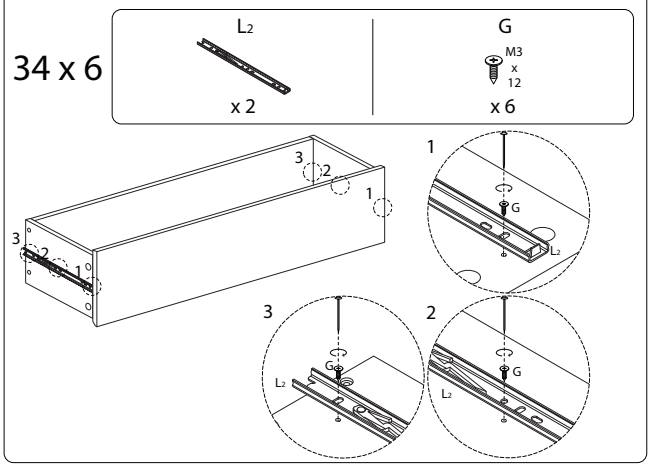

33 x 6

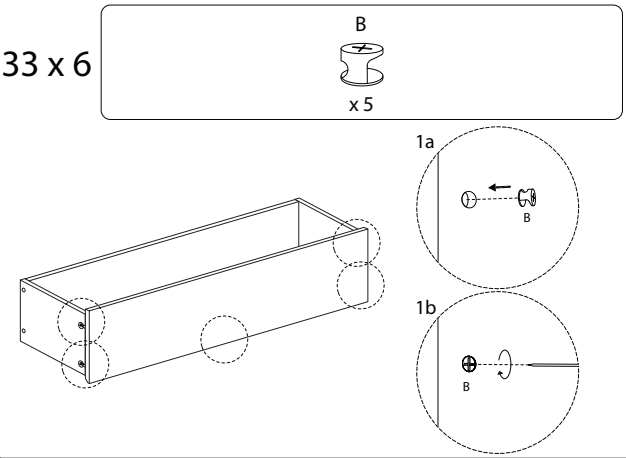

35

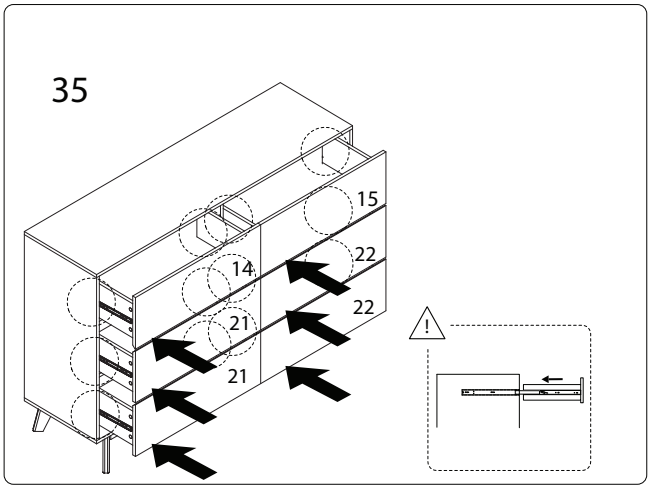

1477/SARDIS/210225/

1477/SARDIS/210225/

36

J_1	J_2
M2 x 10	
x 2	x 2

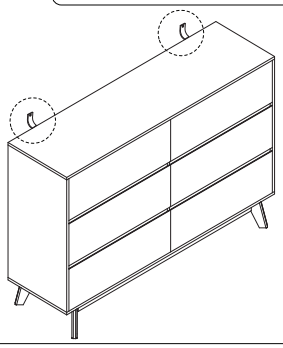

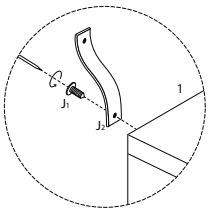

37

J_3	J_4
M4 x 35	
x 2	x 2

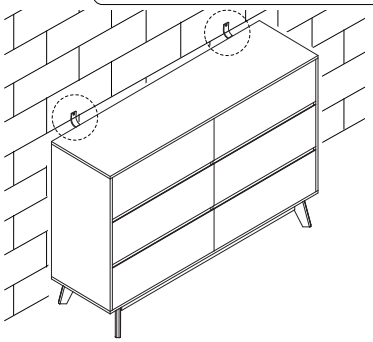

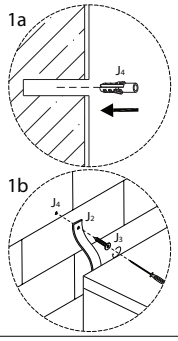

1477/SARDIS/210225/