CUICOCHA

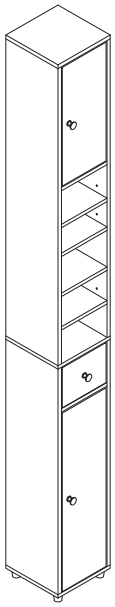

1/19

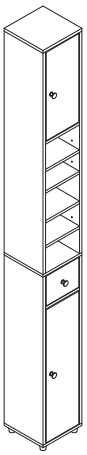

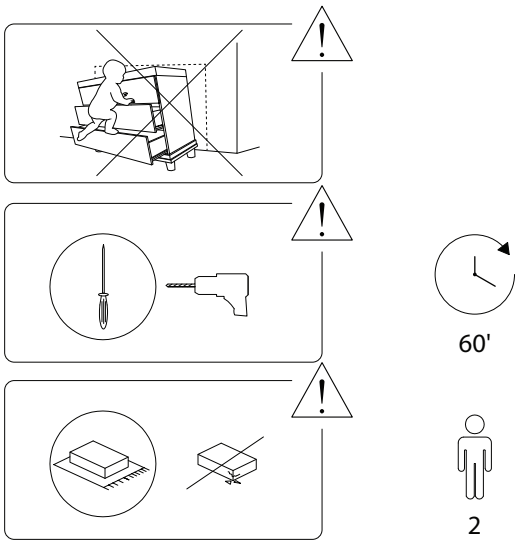

2/19

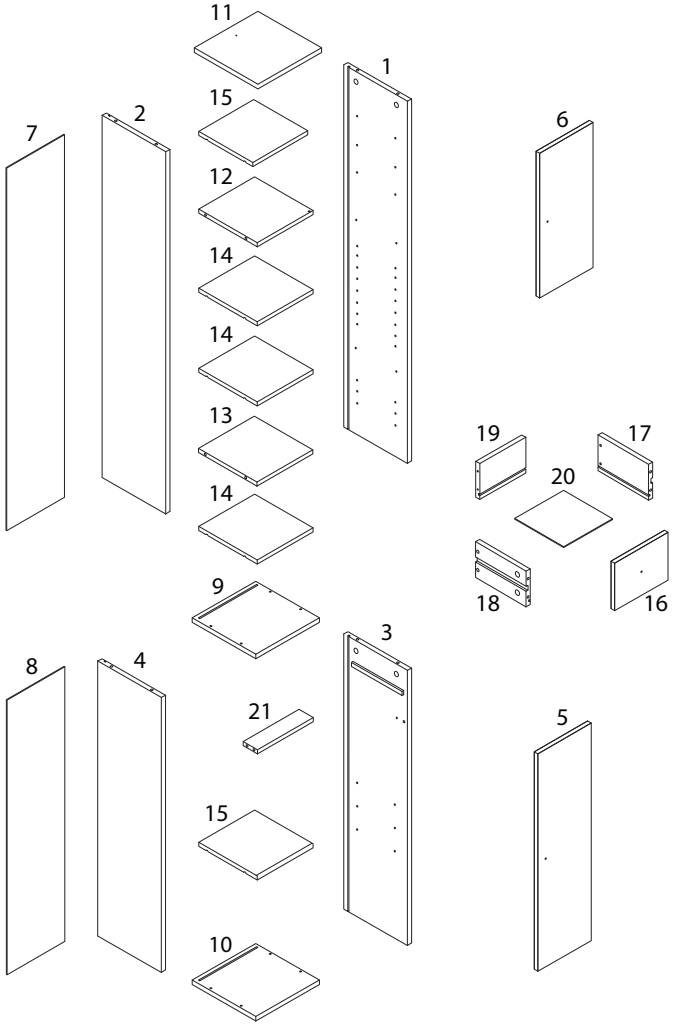

3/19

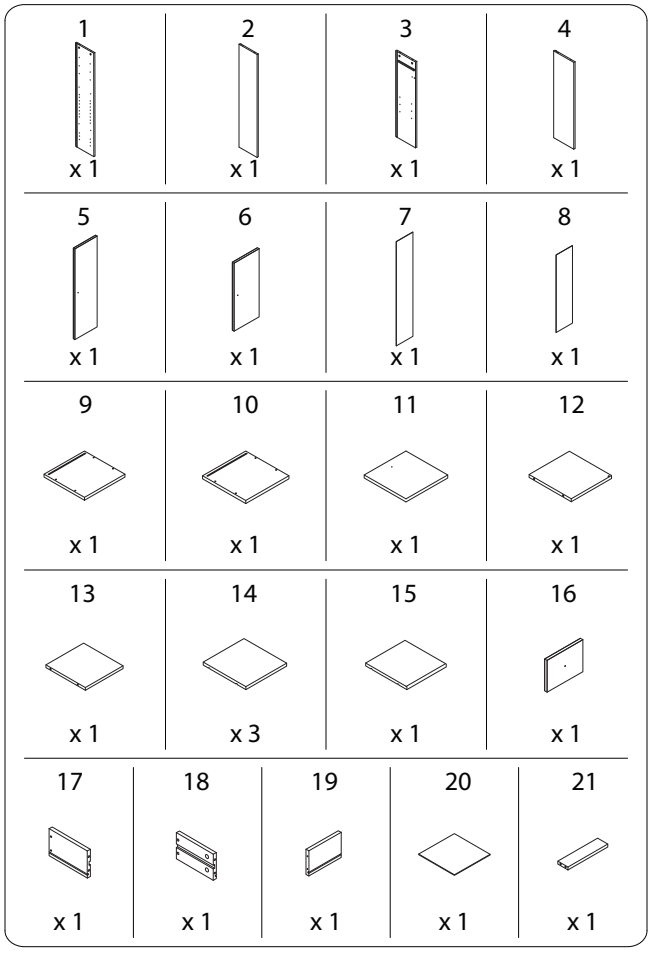

4/19

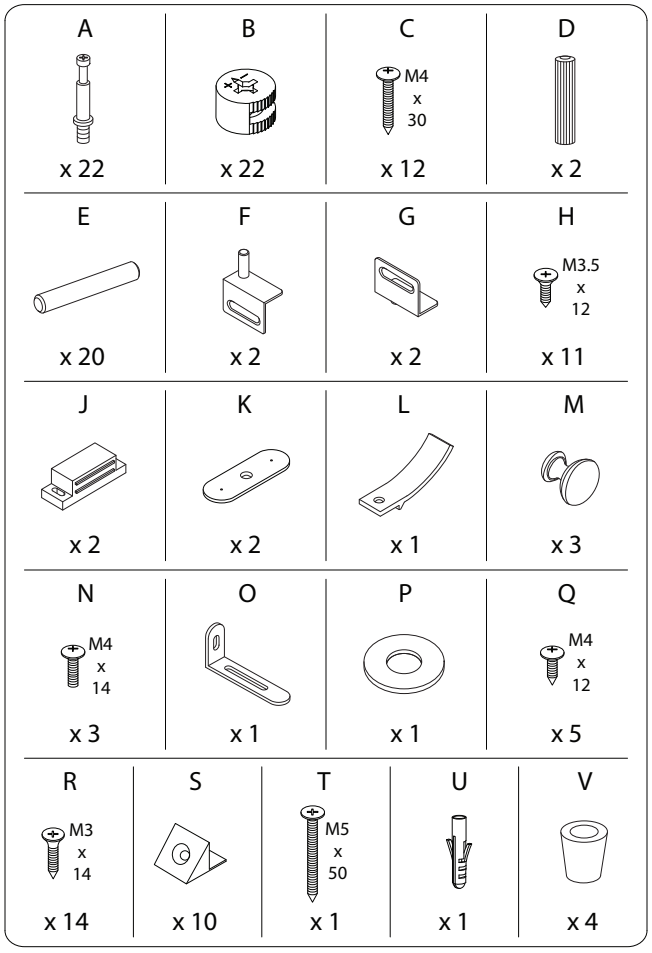
A
x 22
B
x 22
C
M4 x 30
x 12
D
x 2
E
x 20
F
x 2
G
x 2
H
M3.5 x 12
x 11
J
x 2
K
x 2
L
x 1
M
x 3
N
M4 x 14
x 3
O
x 1
P
x 1
Q
M4 x 12
x 5
R
M3 x 14
x 14
S
x 10
T
M5 x 50
x 1
U
x 1
V
x 4

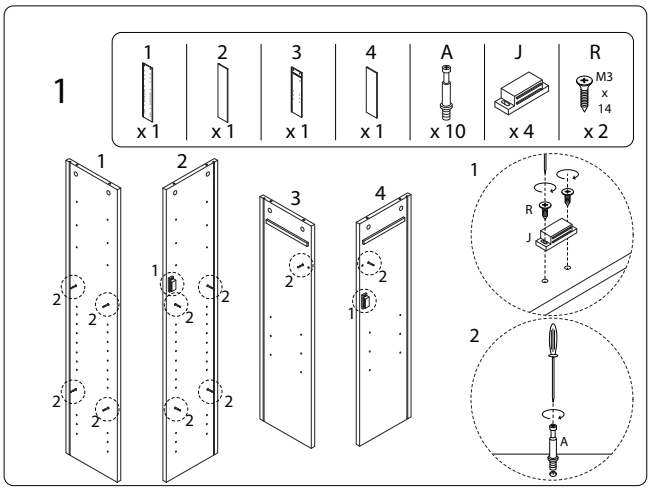
1
1 x 1
2 x 1
3 x 1
4 x 1
A x 10
J x 4
R M3 x 14 x 2

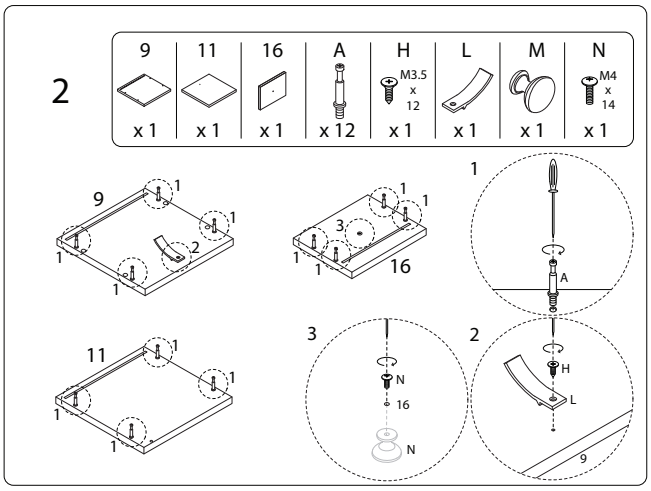
2
9 x 1
11 x 1
16 x 1
A x 12
H M3.5 x 12 x 1
L x 1
M x 1
N M4 x 14 x 1

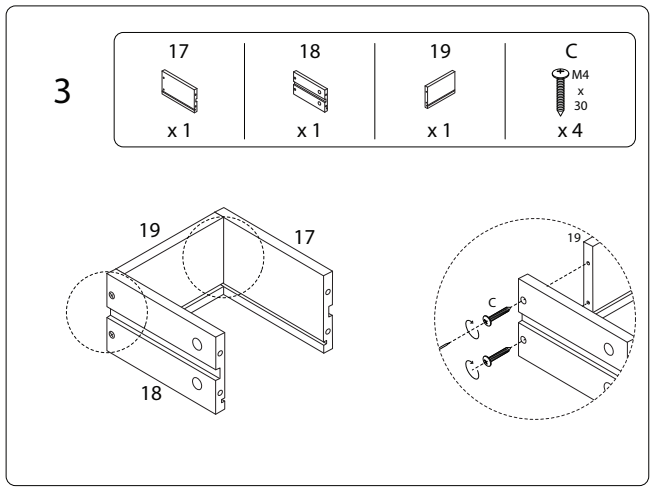
3
17 x 1
18 x 1
19 x 1
C M4 x 30 x 4

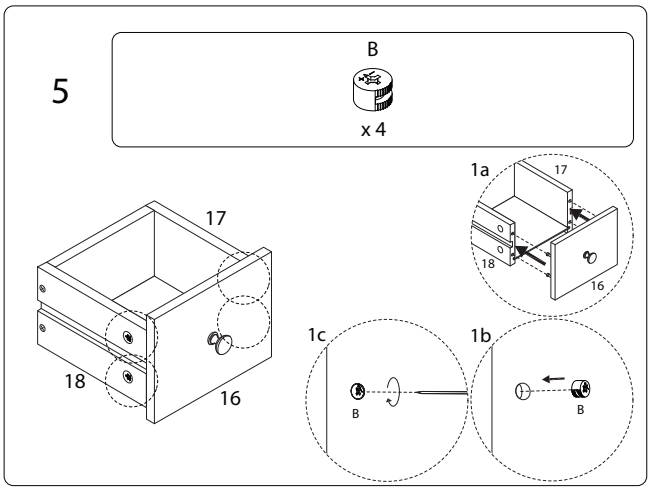
5
B x 4

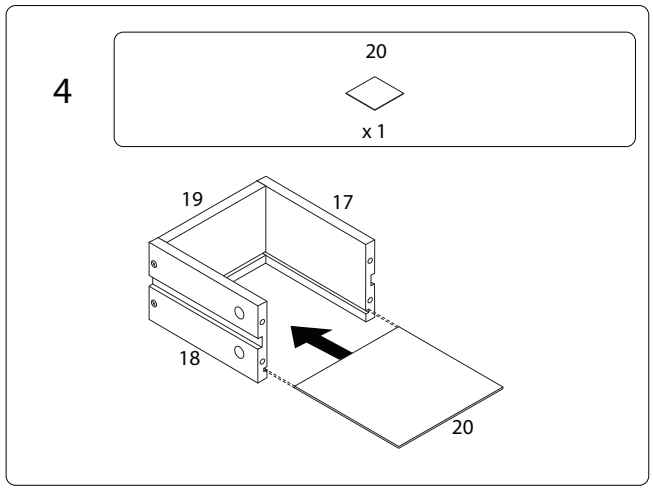
4
20 x 1

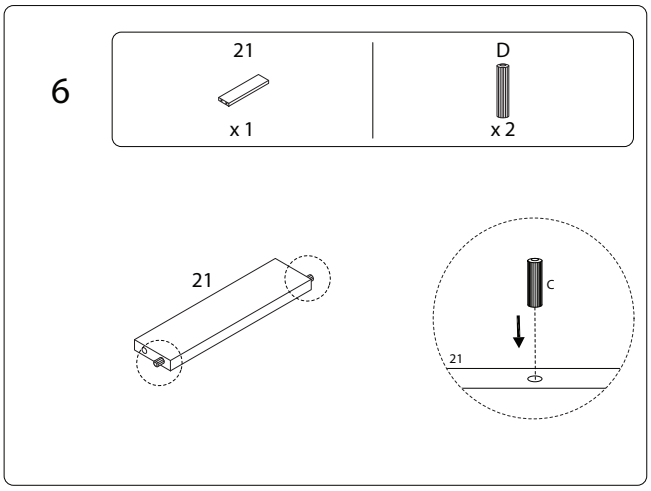
6
21 x 1
D x 2

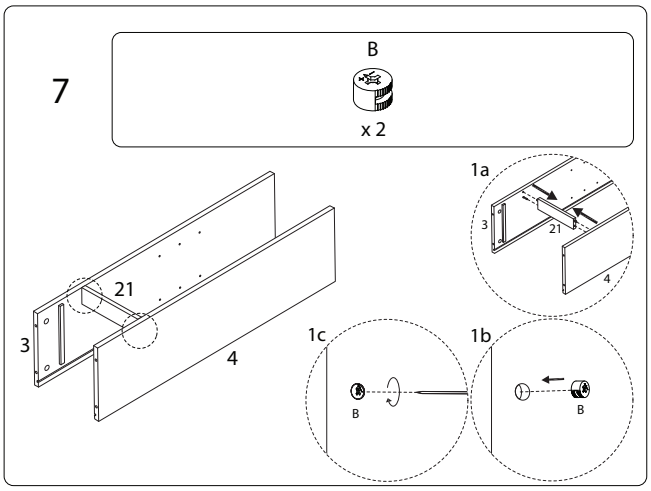
7
B
x 2
21
3
4
1a
1c
1b
B
B

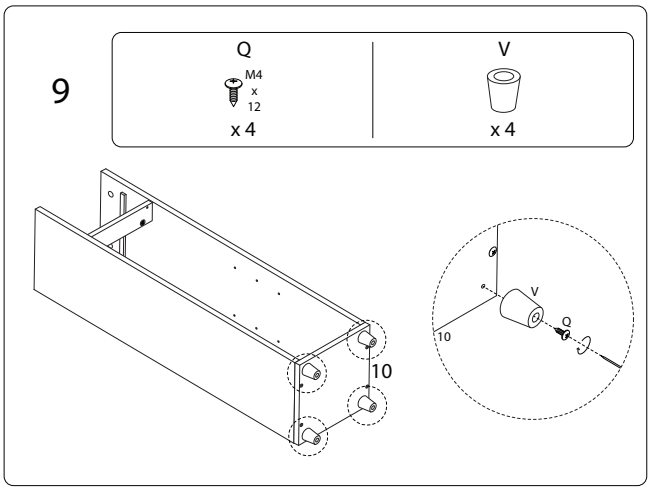
9
Q
M4
x
12
x 4
V
x 4
10
V
Q

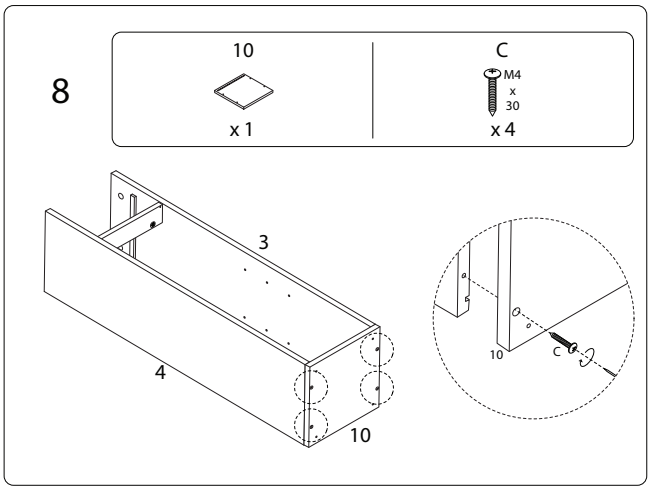
8
10
x 1
C
M4
x
30
x 4
3
4
10
C

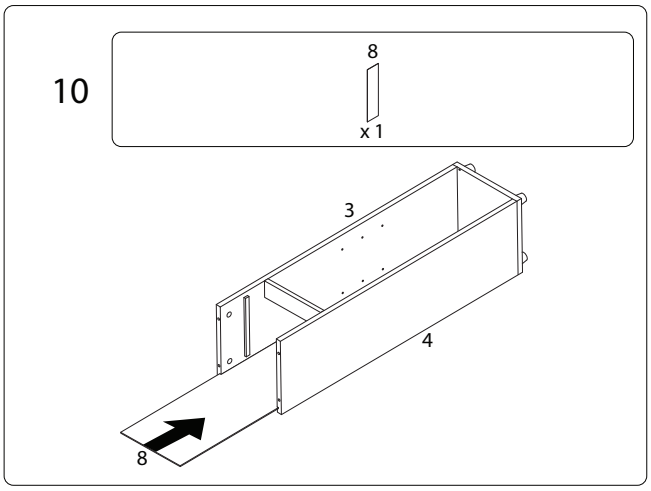
10
8
x 1
3
4
8

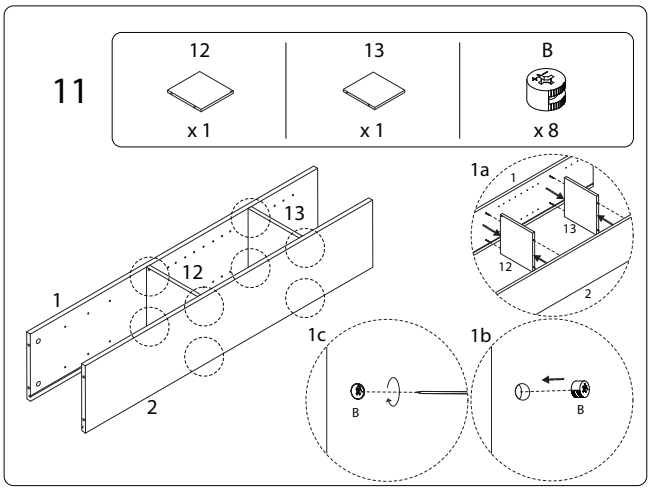
11
12
x 1
13
x 1
B
x 8
13
12
1
2
1a
1c
1b
B
B

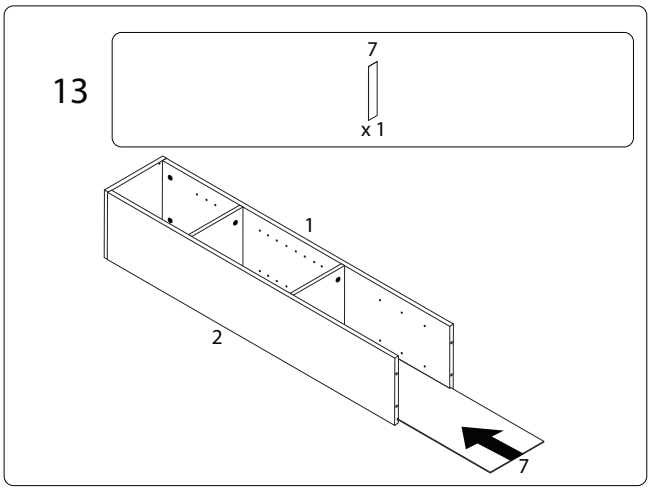
13
7
x 1
1
2
7

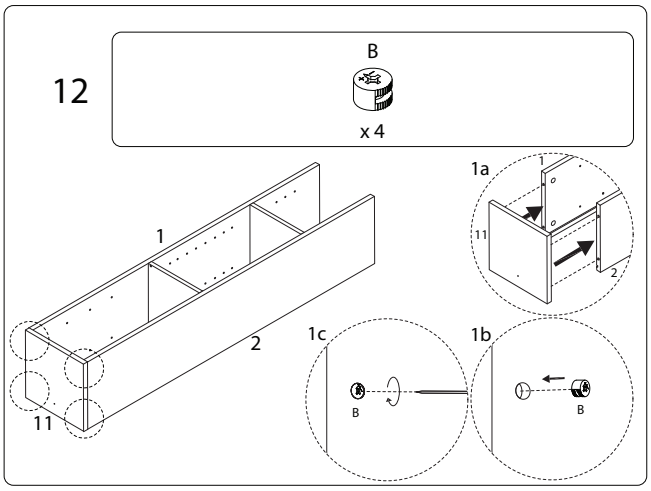
12
B
x 4
1
2
11
1a
1c
1b
B
B

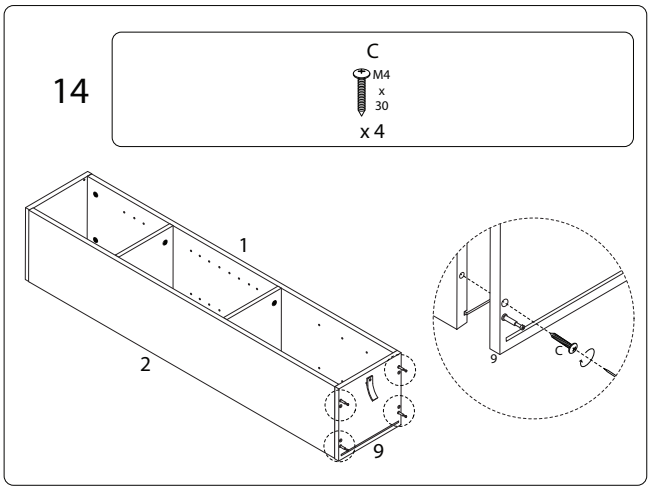
14
C
M4
x
30
x 4
1
2
9
C

15

B

x 4

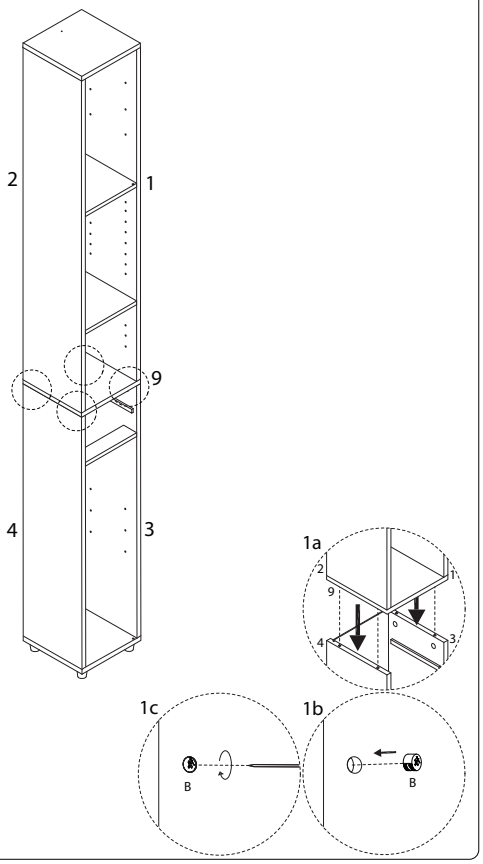

16

R

M3 x 14

x 10

S

x 10

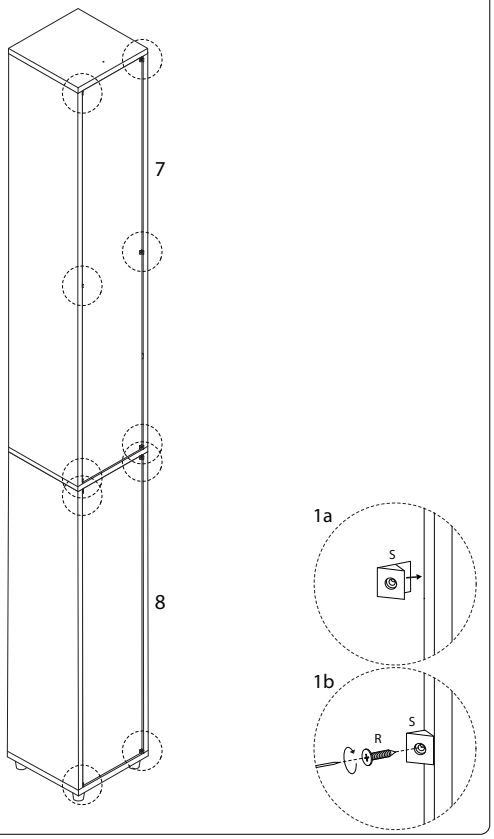

17

14

x 3

15

x 2

E

x 20

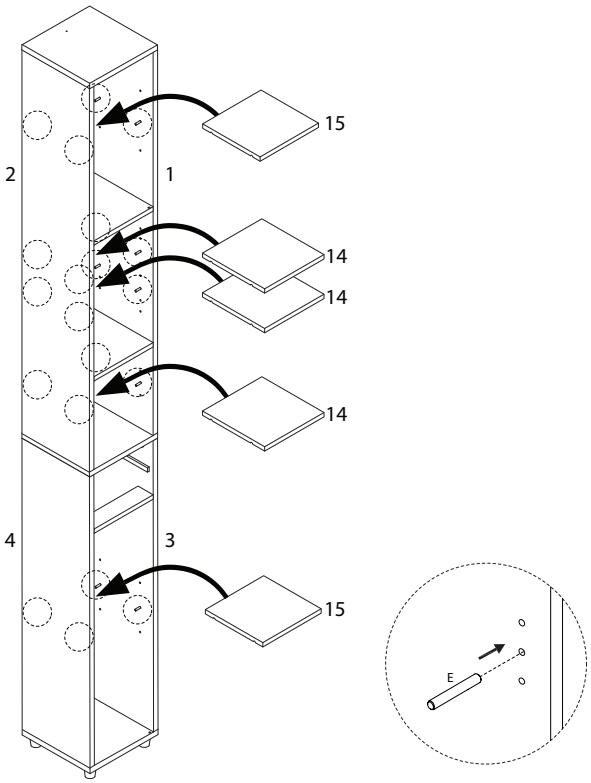

18

O

x 1

P

x 1

Q

M4 x 12

x 1

T

M5 x 50

x 1

U

x 1

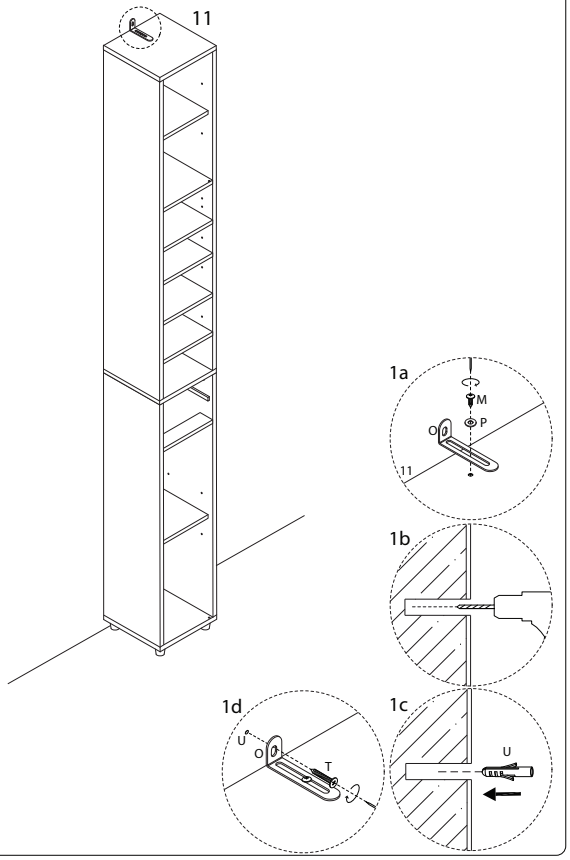

19

F	G
x 2	x 2

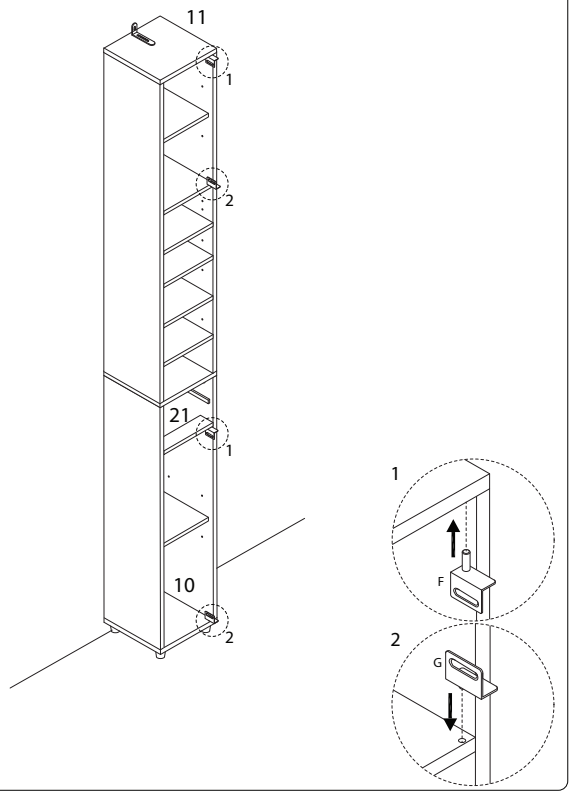

20

5	6	H	K	M	N
x 1	x 1	M3.5 x 12 x 10	x 2	x 2	M4 x 14 x 2

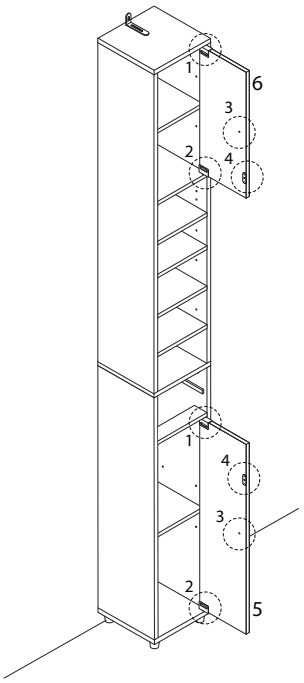

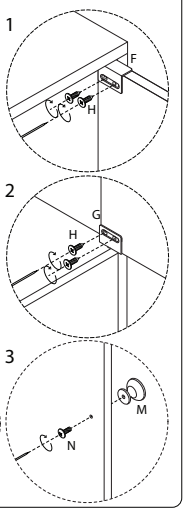

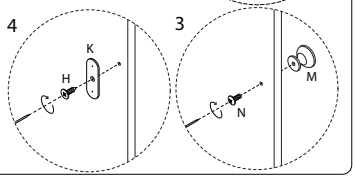

21

