NURMO

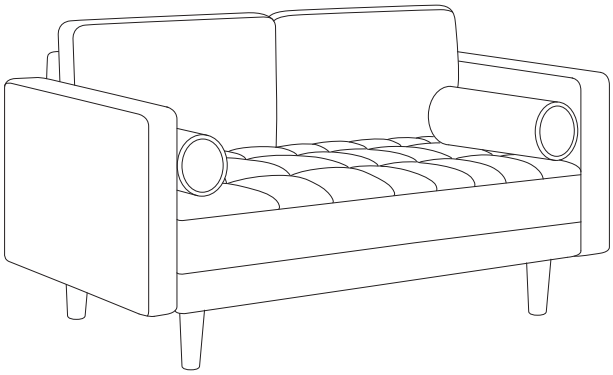

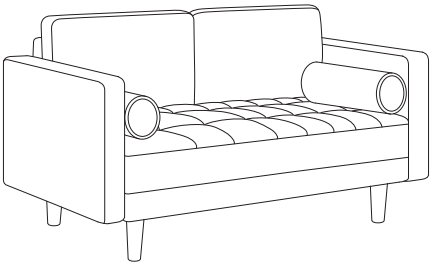

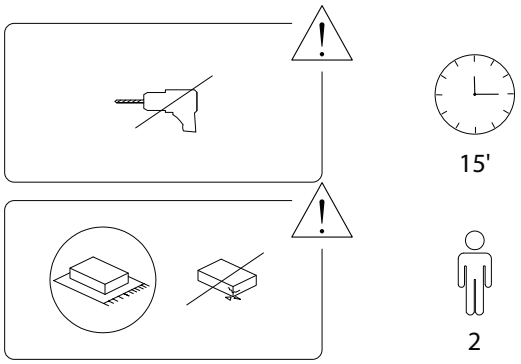

1/5

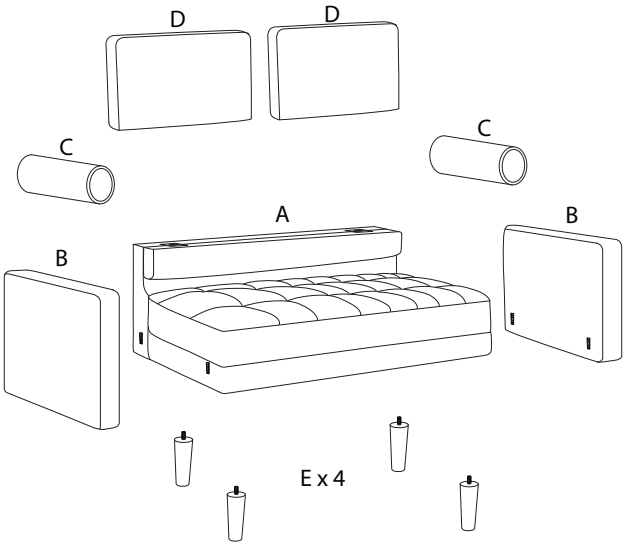

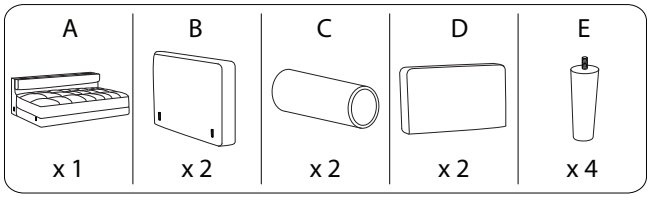

2/5

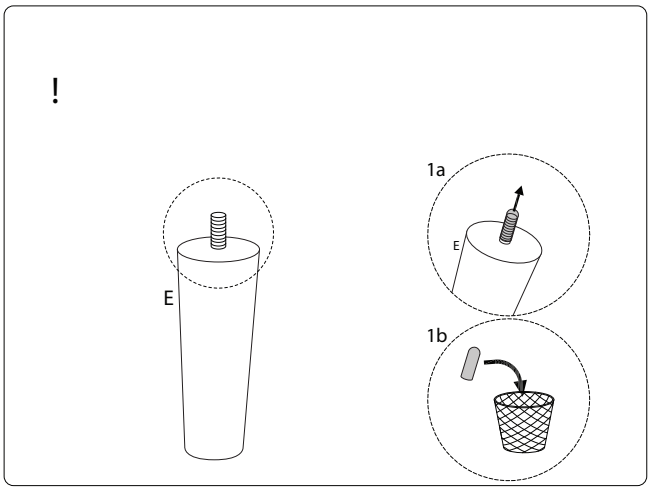

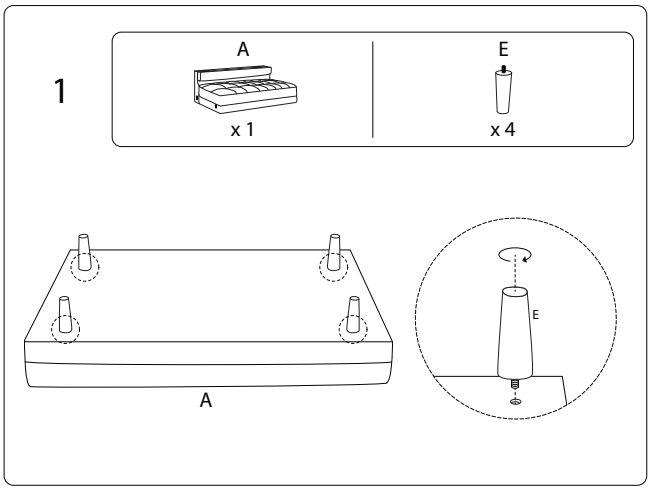

3/5

2

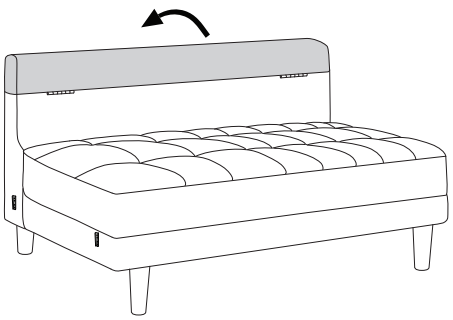

4

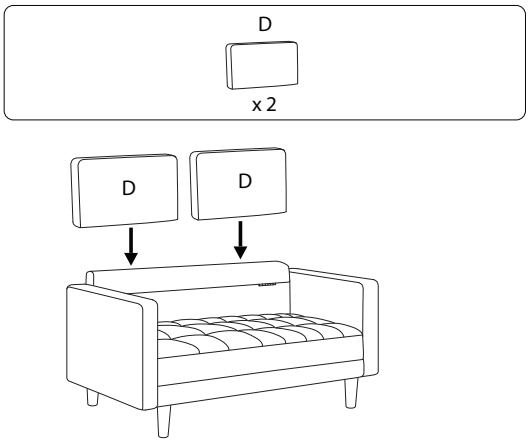

3

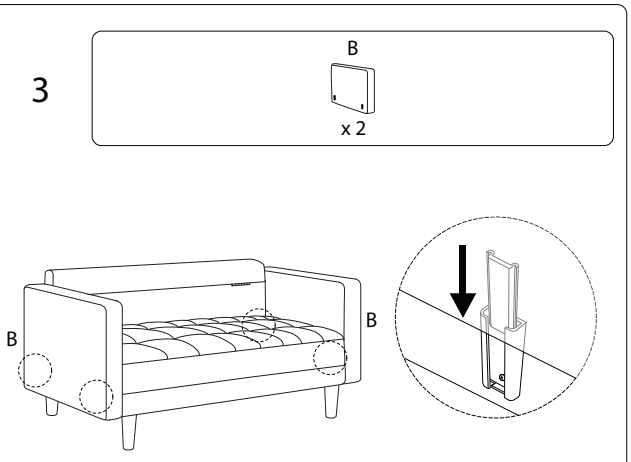

5

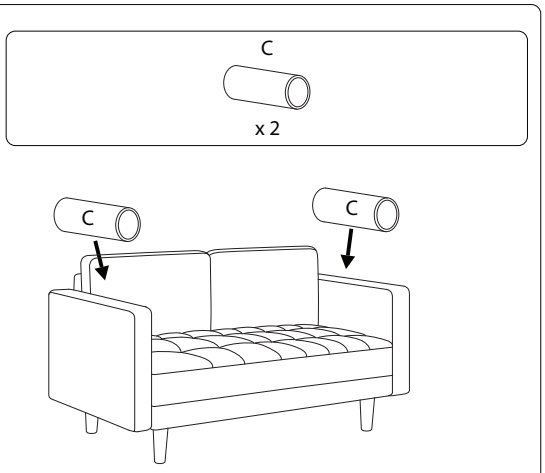

1082/NURMO/260224/

1082/NURMO/260224/