MOURA

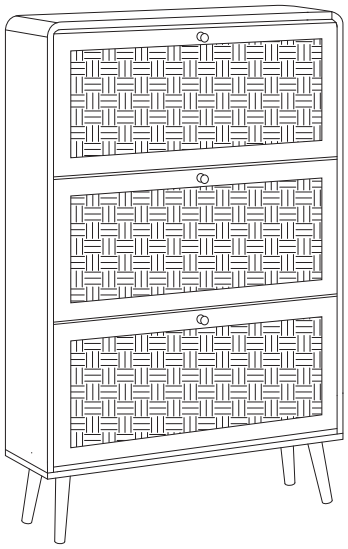

1/17

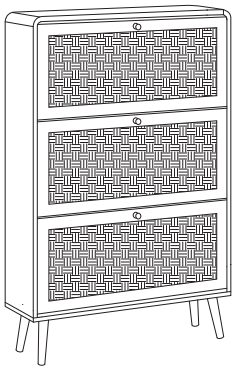

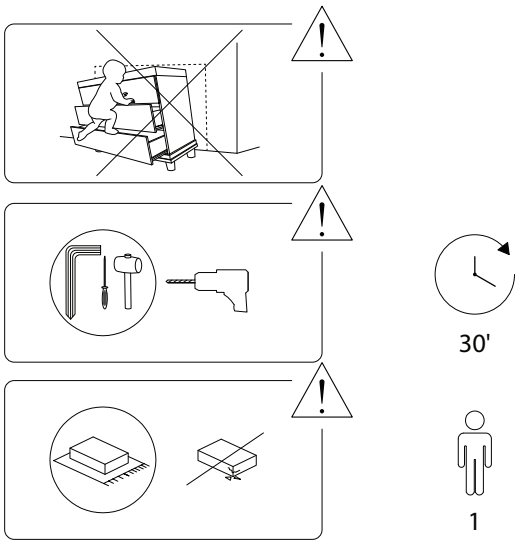

2/17

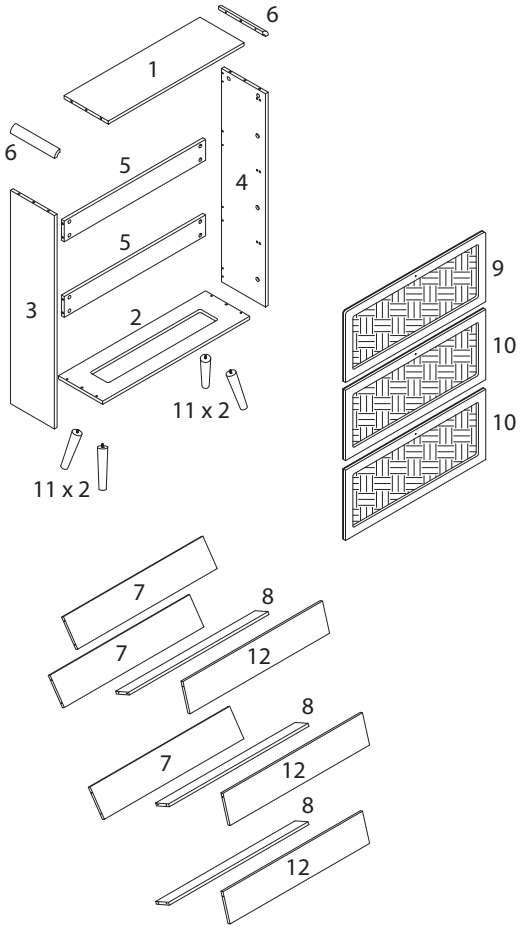

3/17

1 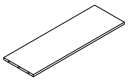 x 1	2 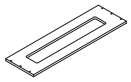 x 1	3  x 1
4  x 1	5 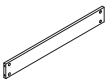 x 2	6  x 2
7 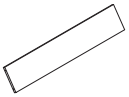 x 3	8 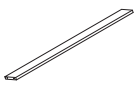 x 3	9 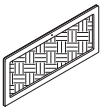 x 1
10 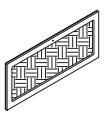 x 2	11  x 4	12 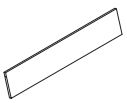 x 1

4/17

2581/MOURA/070426/

A	B	C	D
			
x 16	x 16	x 4	x 36
E	**F**	**G**	**H**
	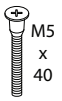	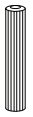	
x 4	x 4	x 6	x 1
I	**J**	**K**	**L**
			
x 6	x 3	x 3	x 3
M	**O**	**P**	**Q**
			
x 6	x 6	x 2	x 2
R		**S**	
			
x 3		x 36	

1

3	4	O
x 1	x 1	x 6

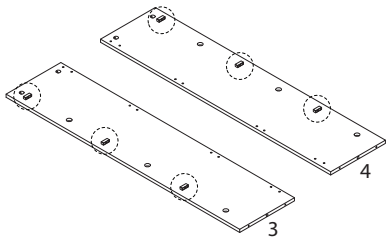

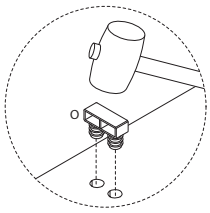

2

6	A
x 2	x 16

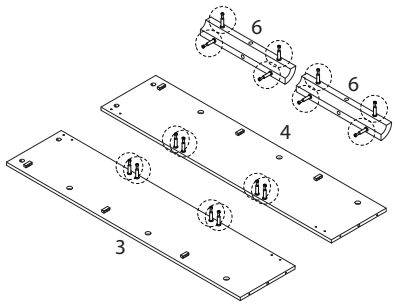

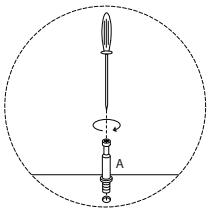

3

1	5	B
x 1	x 2	x 12

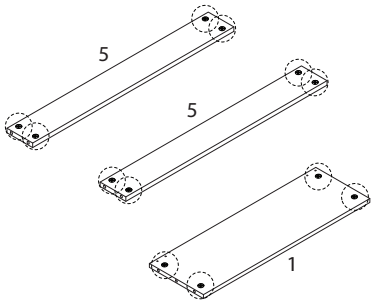

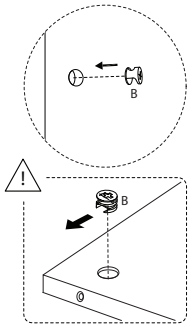

5

B	G
x 4	x 4

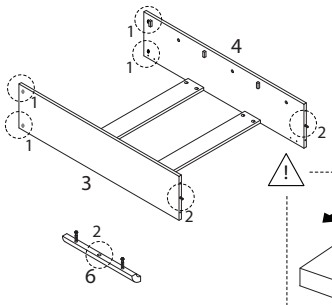

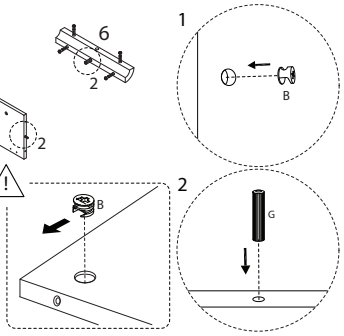

4

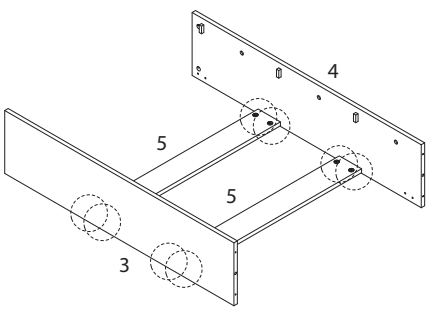

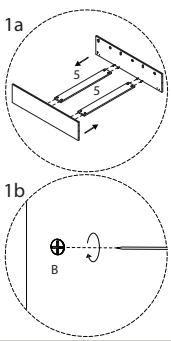

6

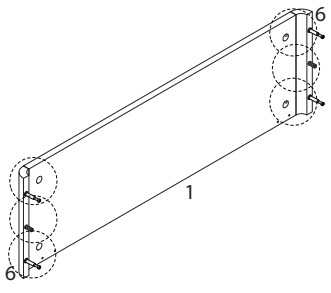

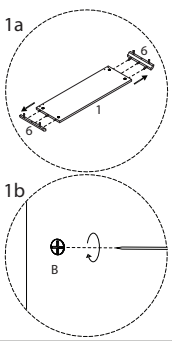

7

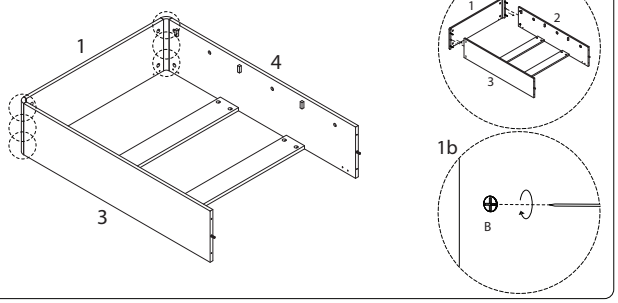

8



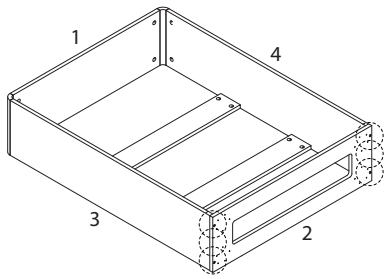

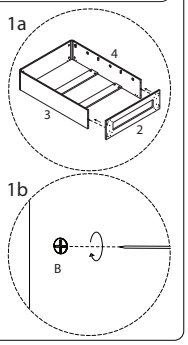

9

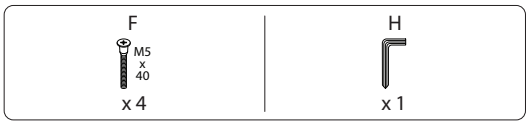

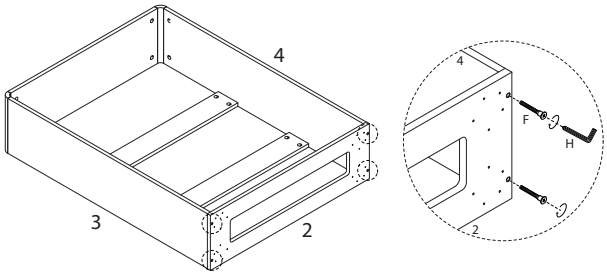

10

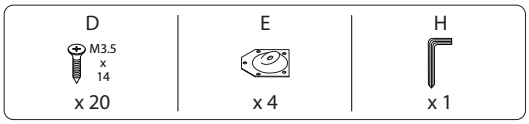

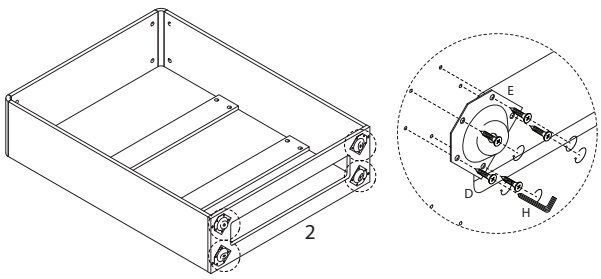

11

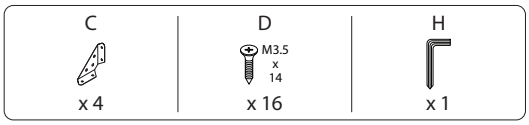

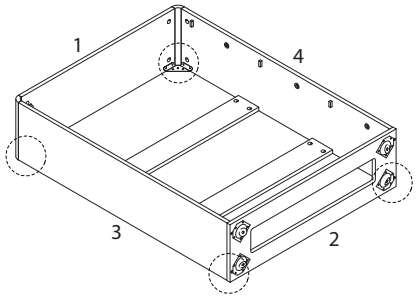

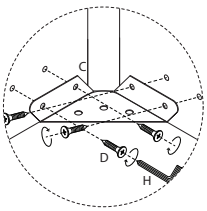

12

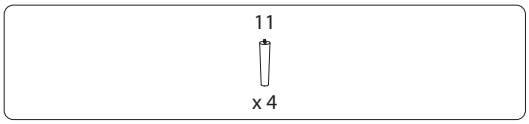

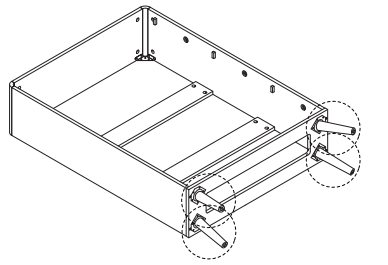

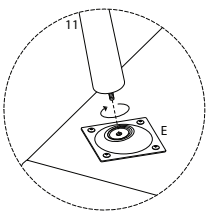

13

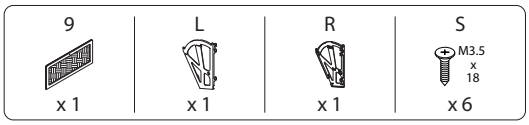

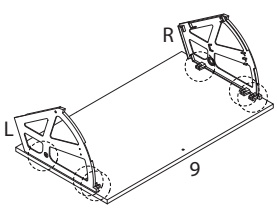

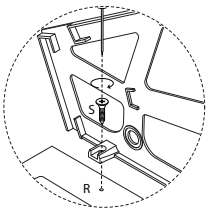

14 x 2

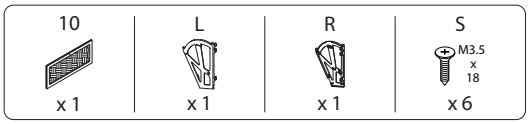

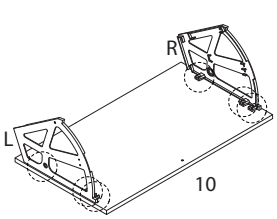

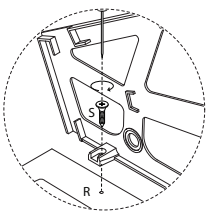

15

8	S
x 1	x 4

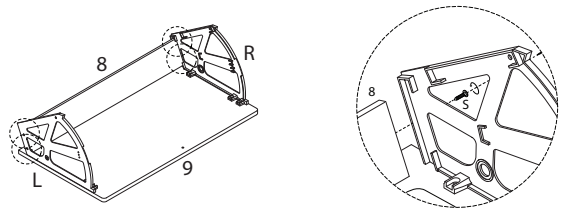

16 x 2

8	S
x 1	x 4

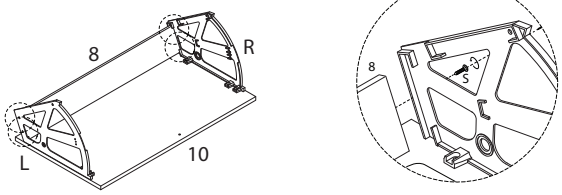

17

7	S
x 1	x 2

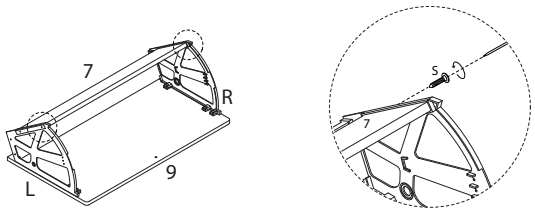

18 x 2

7	S
x 1	x 2

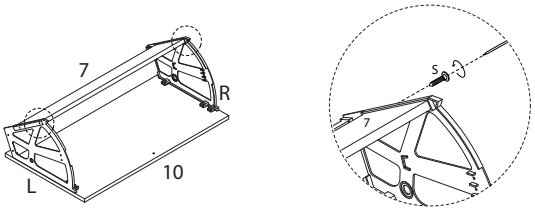

19

H	J	K
x 1	x 1	x 1

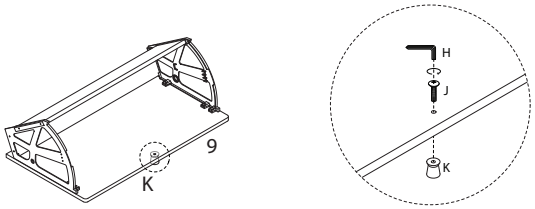

20 x 2

H	J	K
x 1	x 1	x 1

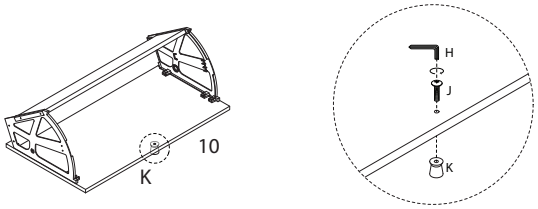

21

P	Q
x 2	x 2

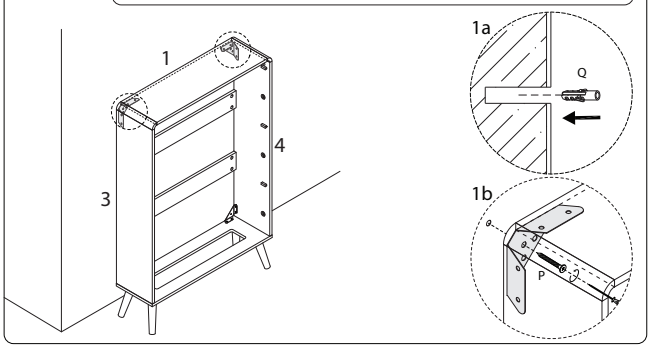

22

H	I	M
x 1	x 6	x 6

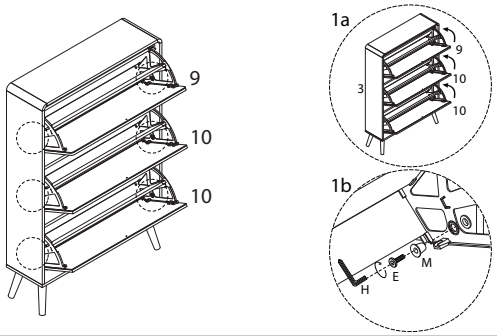

23

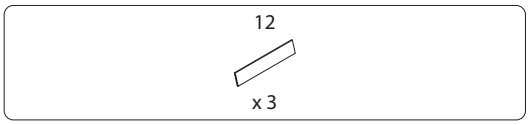

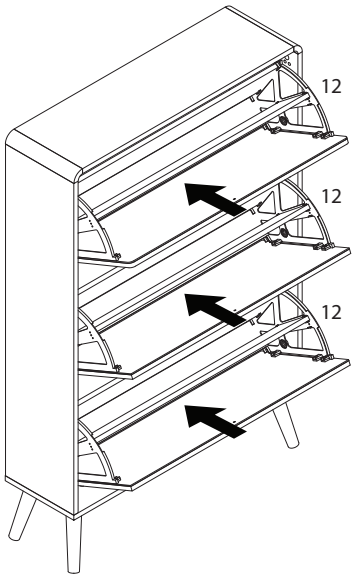

2581/MOURA/070426/