SOLETTA

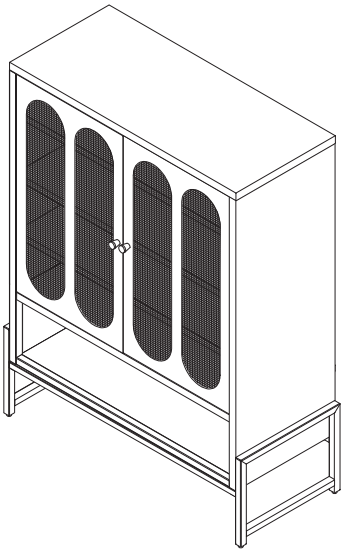

1/14

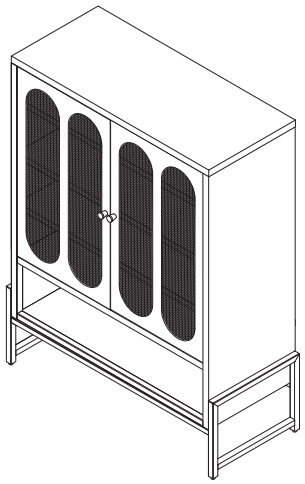

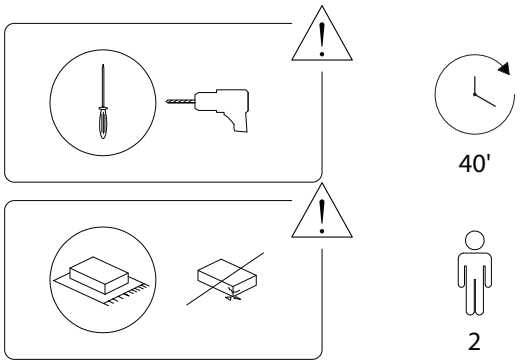

2/14

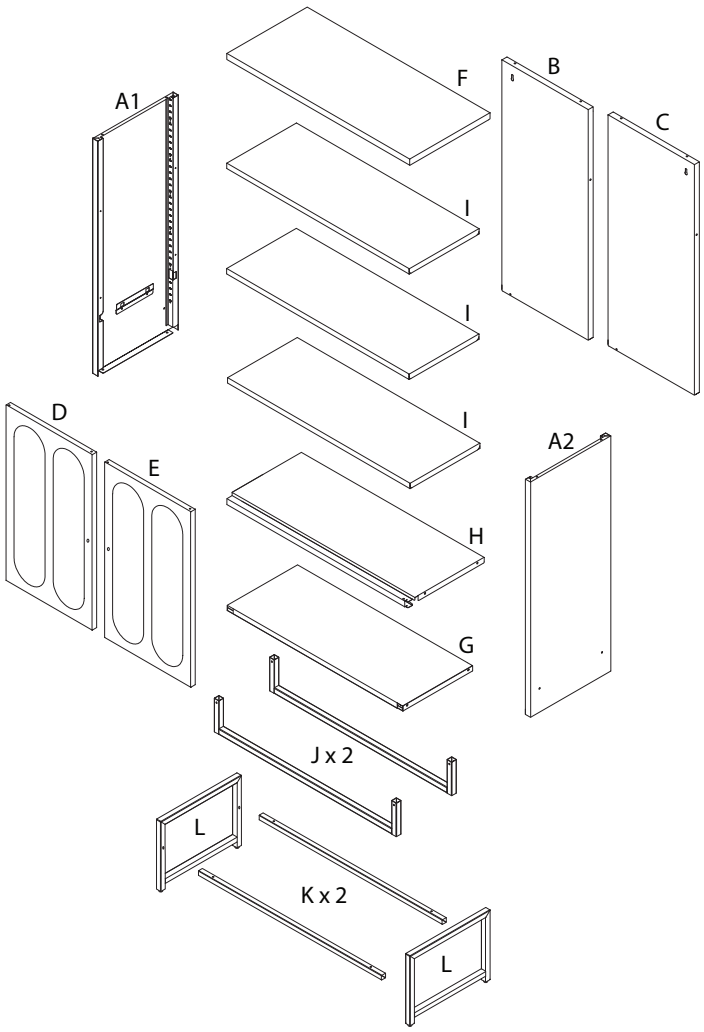

3/14

A1 x 1	A2 x 1	B x 1	C x 1
D x 1	E x 1	F x 1	G x 1
H x 1	I x 3	J x 2	K x 2	L x 2
1 x 2	2 x 12	3 M4 x 8 x 32	4 M4 x 22 x 2	5 x 4	6 x 2
7 x 4	8A M4 x 8 x 2	8B x 2	9A M6 x 37 x 2	9B x 2	10 x 1

4/14

1

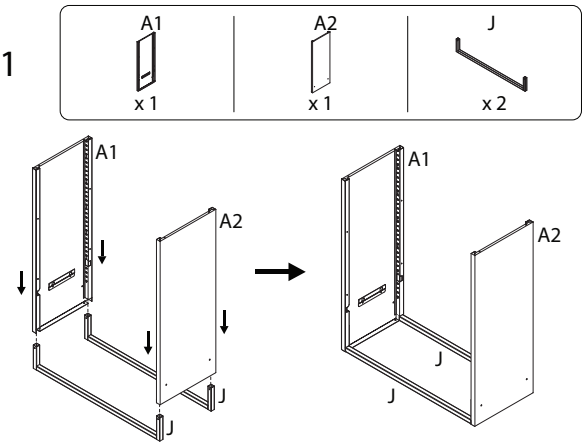

2

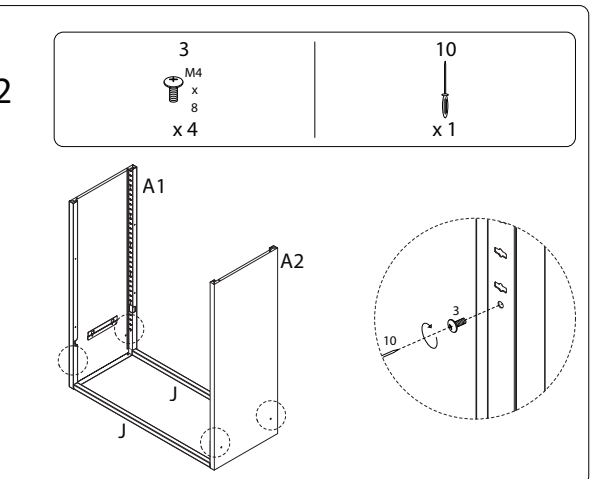

5/14

3

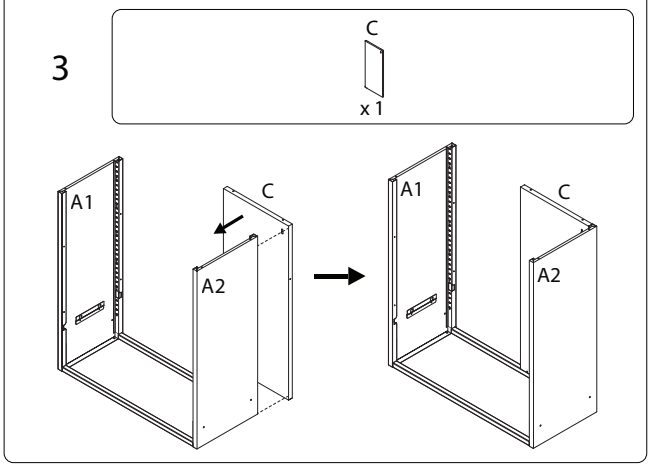

4

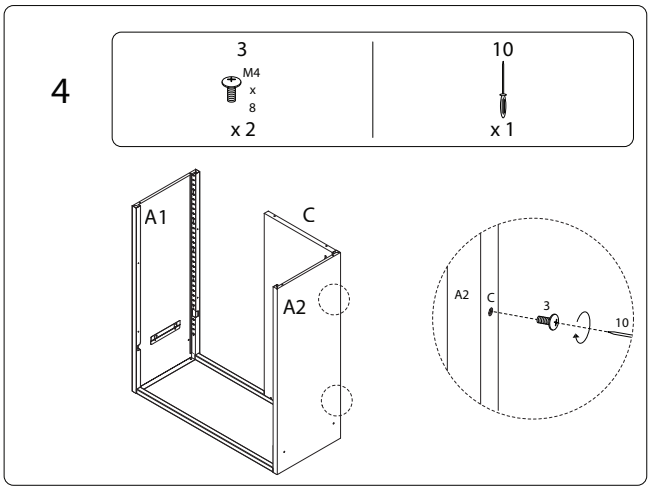

6/14

5

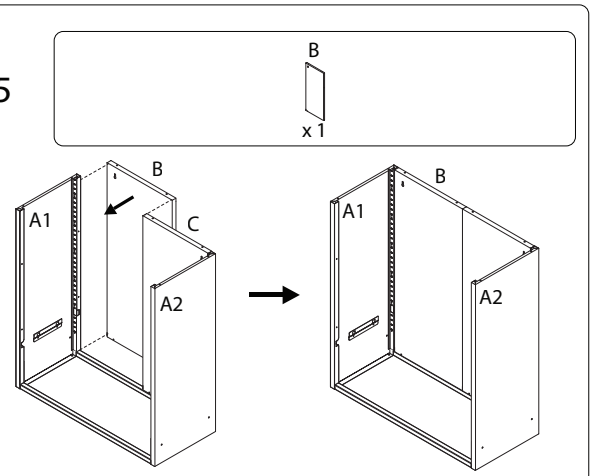

7

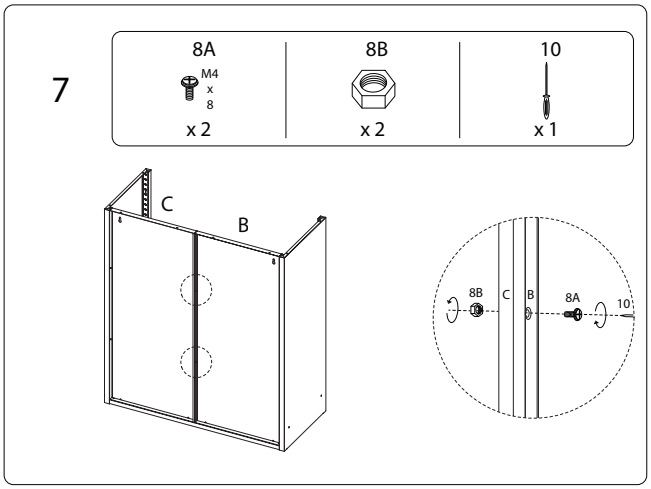

6

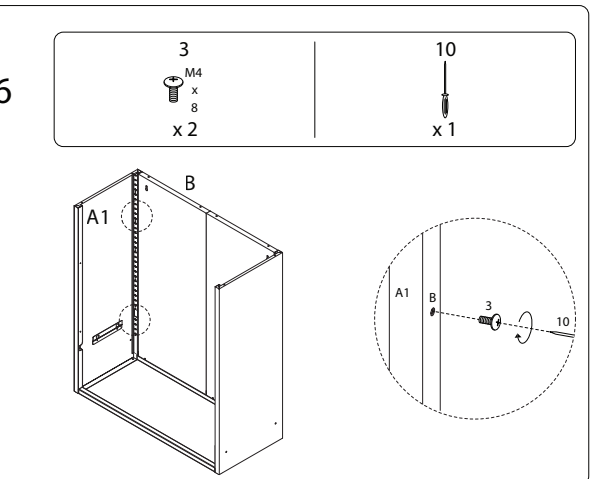

7/14

8

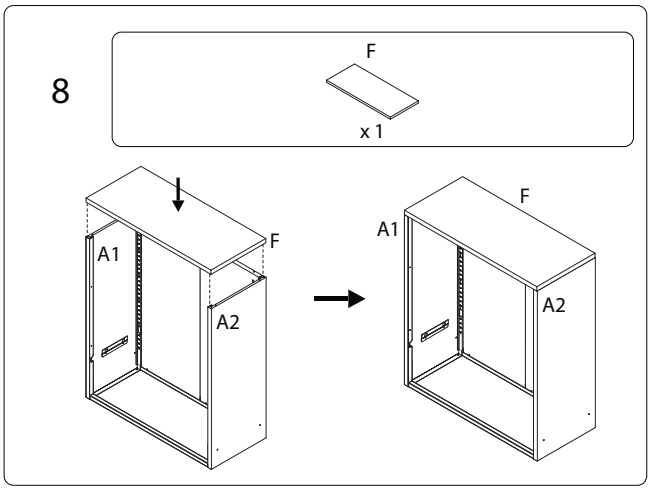

8/14

1914/SOLETTA/160426/

9

3 M4 x 8 x 8

10 x 1

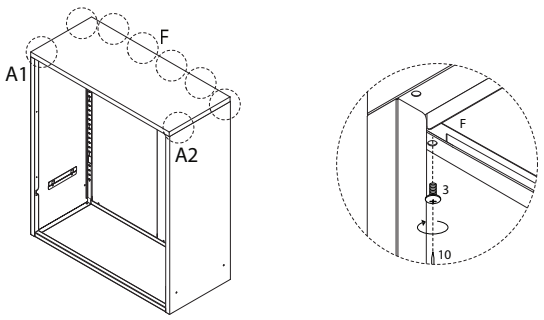

10

G x 1

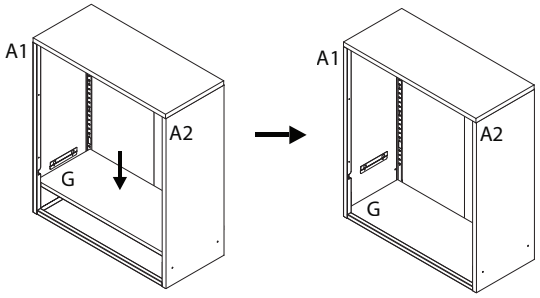

11

H x 1

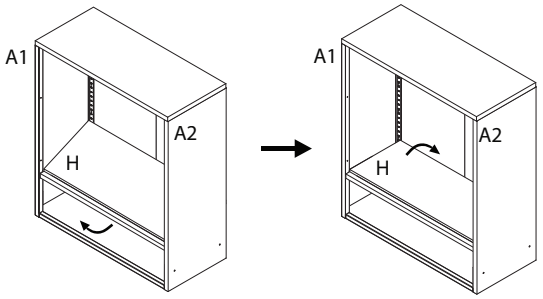

12 x 2

L x 1

3 M4 x 8 x 2

7 x 2

10 x 1

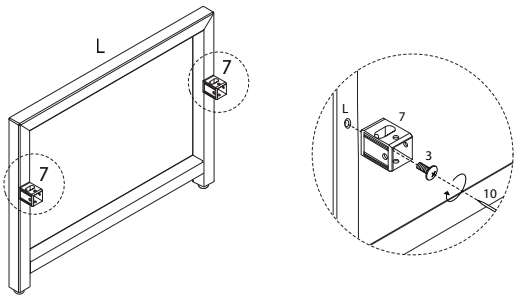

13

K x 2

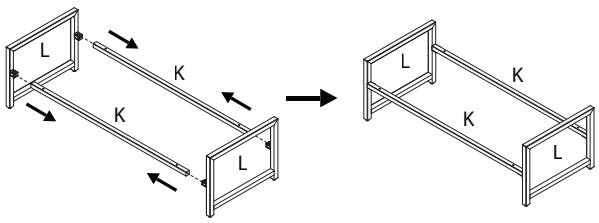

14

3 M4 x 8 x 4

10 x 1

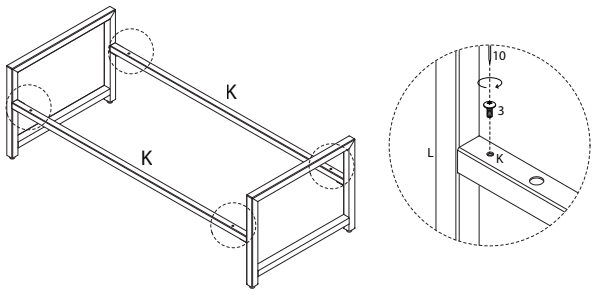

15

3 M4 x 8 x 8

10 x 1

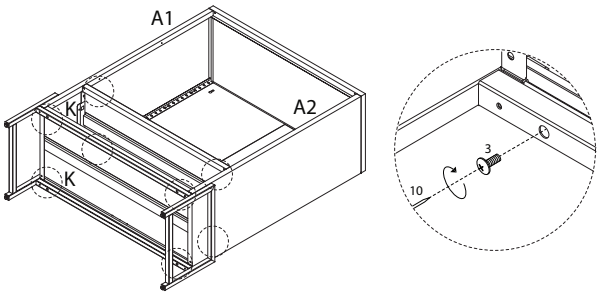

16

2 x 12

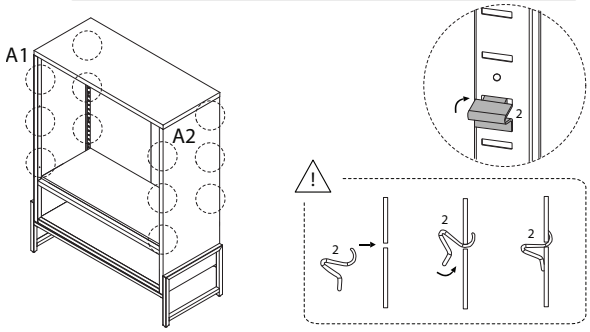

17

I

x 3

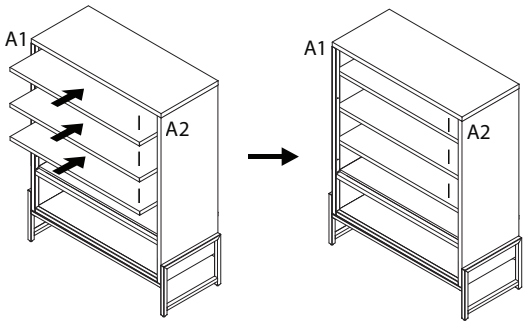

18

D	E	5	6
x 1	x 1	x 2	x 2

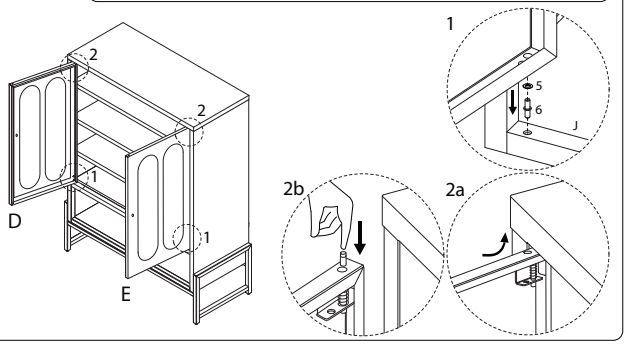

19

1	4	5	10
x 2	M4 x 22 x 2	x 2	x 1

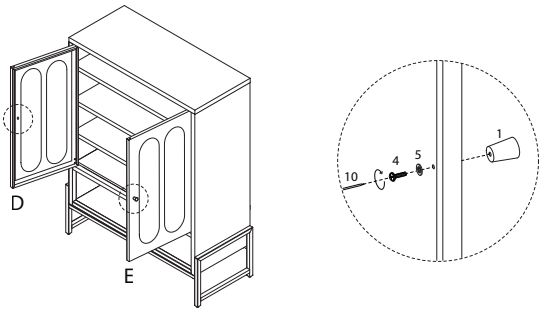

20

9A	9B	10
M6 x 37 x 2	x 2	x 1

