ELMA

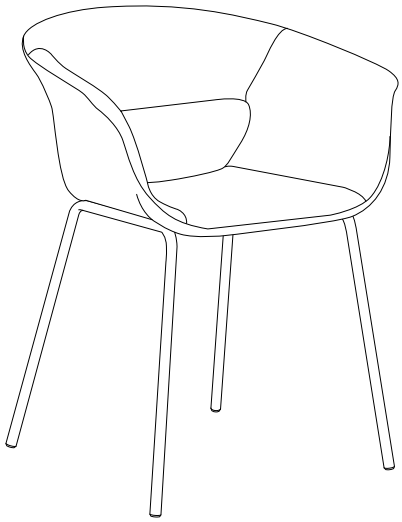

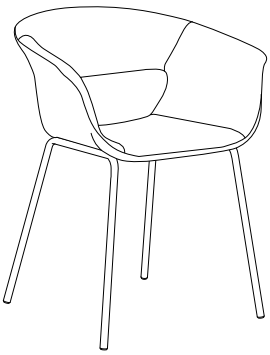

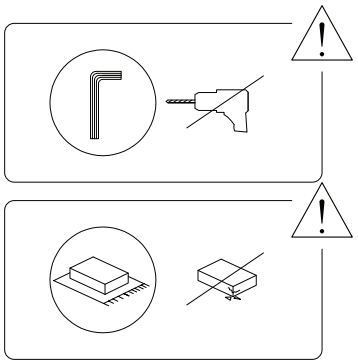

15'

1

Beliani

Beliani
715/ELMA/080124/

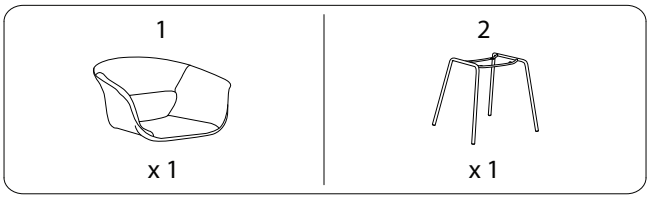

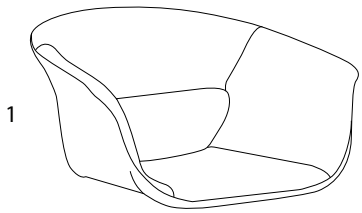

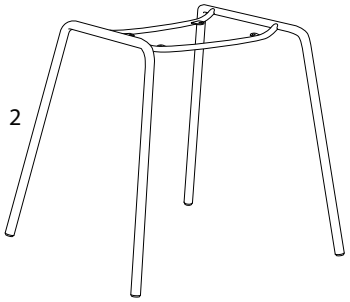

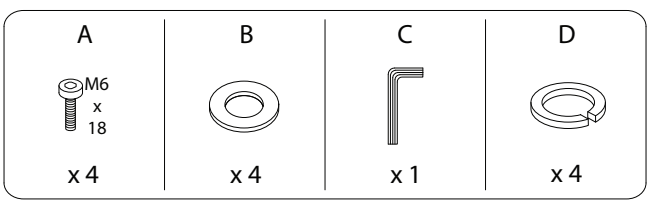

Beliani
715/ELMA/080124/

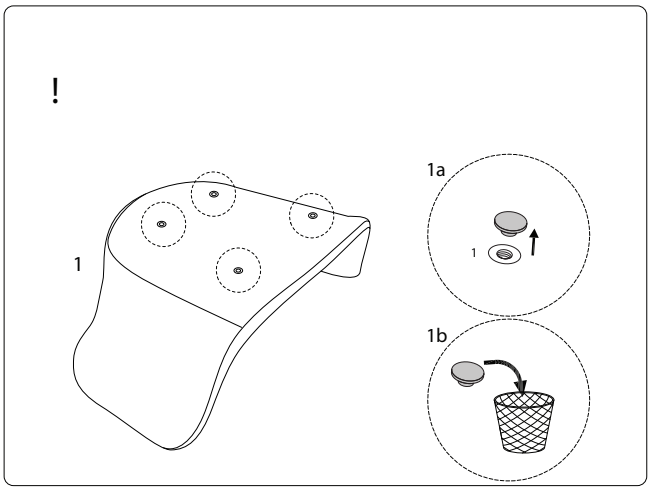

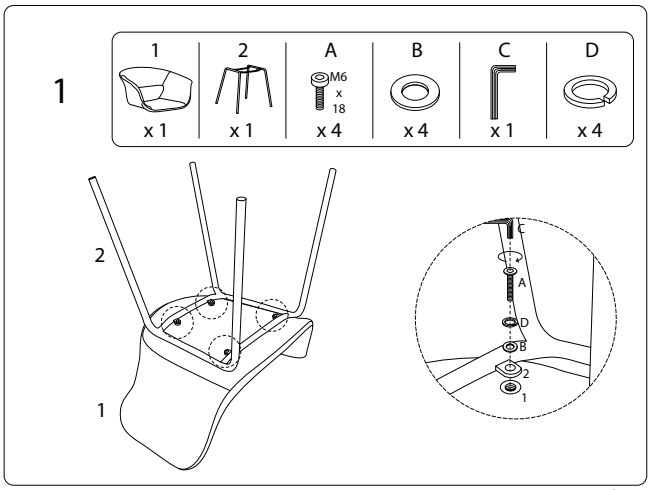

Beliani
715/ELMA/080124/