SOUTRIN

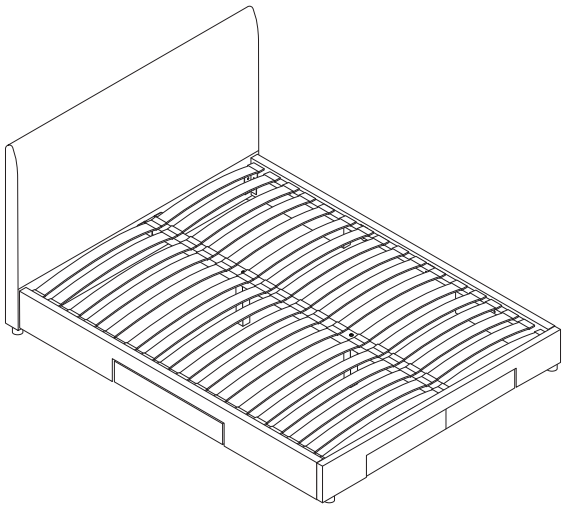

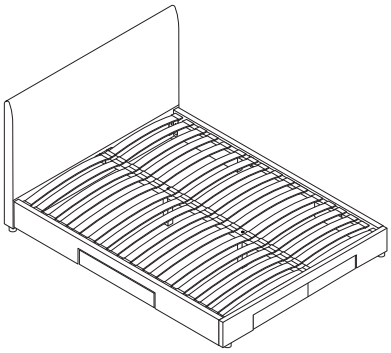

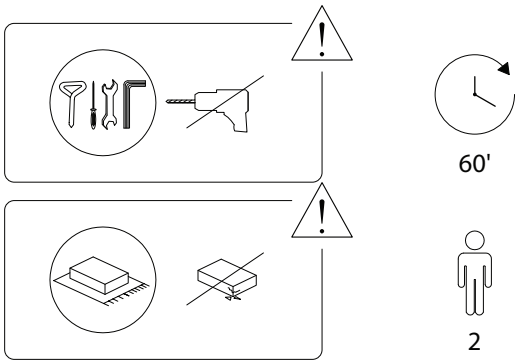
60'
2

1/13

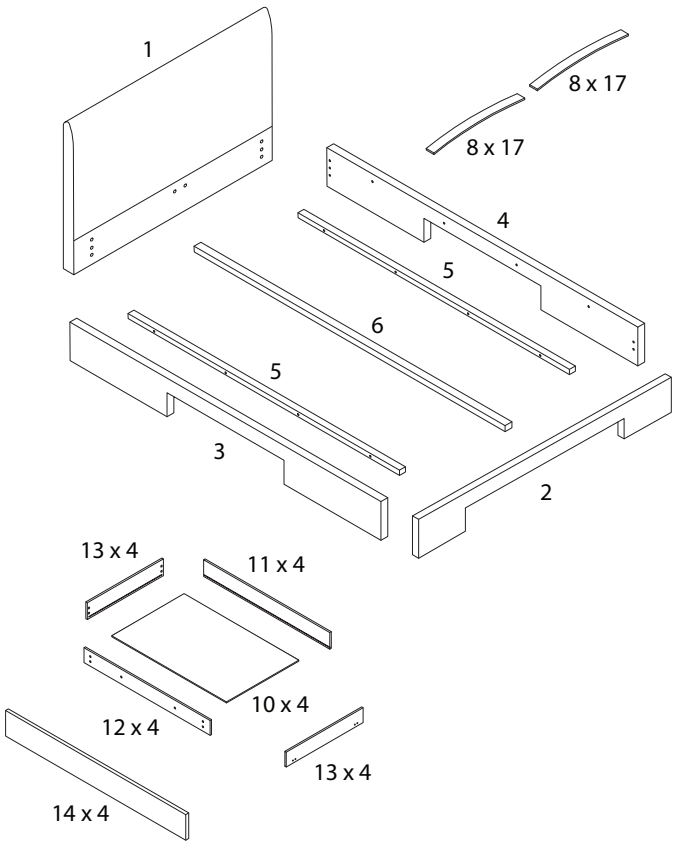
1
8 x 17
8 x 17
4
5
6
5
3
2
13 x 4
11 x 4
10 x 4
12 x 4
13 x 4
14 x 4

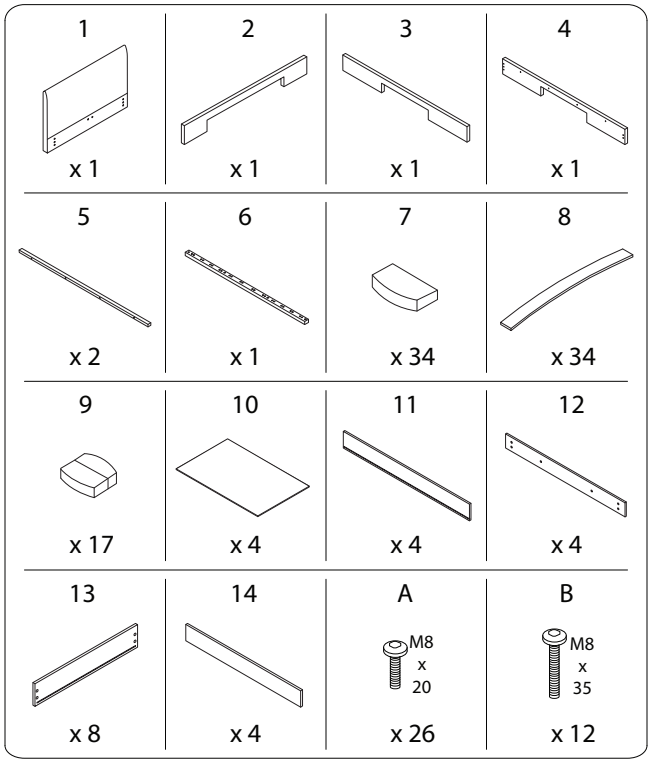
1
x 1
2
x 1
3
x 1
4
x 1
5
x 2
6
x 1
7
x 34
8
x 34
9
x 17
10
x 4
11
x 4
12
x 4
13
x 8
14
x 4
A
M8 x 20
x 26
B
M8 x 35
x 12

C	D	E	F
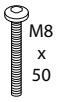 M8 x 50	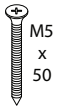 M5 x 50	 M3.5 x 15	
x 8	x 4	x 48	x 2
G	H	I	J
			
x 2	x 16	x 32	x 32
K	L	M	N
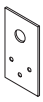			
x 8	x 4	x 2	x 2
O	P	Q	R
			
x 4	x 1	x 1	x 1

1

1	2	D	L	P
x 1	x 1	M5 x 50 x 4	x 4	x 1

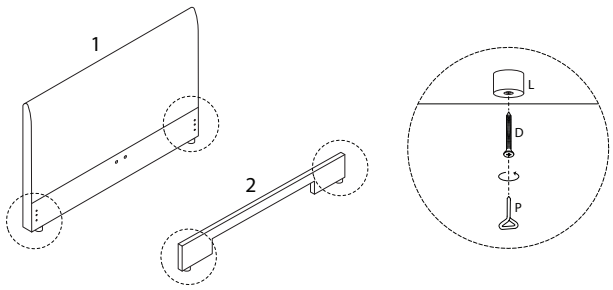

2

3	4	A	O	Q
x 1	x 1	M8 x 20 x 8	x 2	x 1

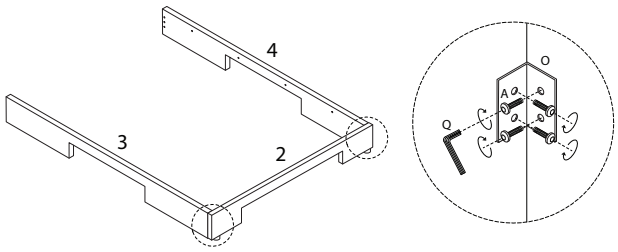

3

A	N	O	Q
M8 x 20 x 12	x 2	x 2	x 1

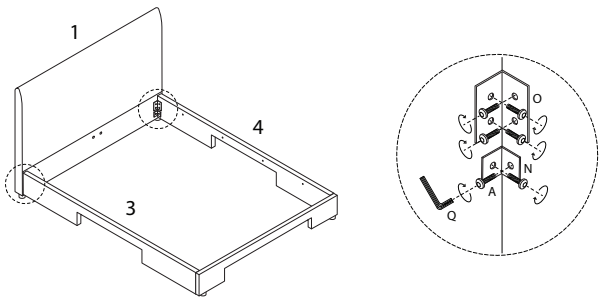

5

A	K	Q
M8 x 20 x 2	x 2	x 1

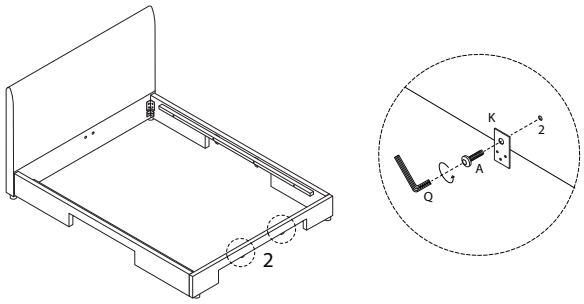

4

5	C	K	Q
x 2	M8 x 50 x 8	x 4	x 1

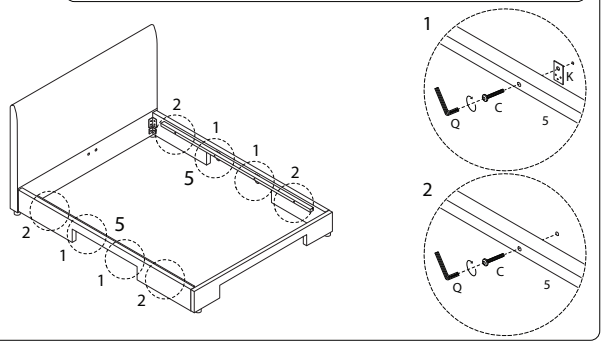

6

6	B	M	F	Q	R
x 1	M8 x 35 x 2	x 2	x 2	x 1	x 1

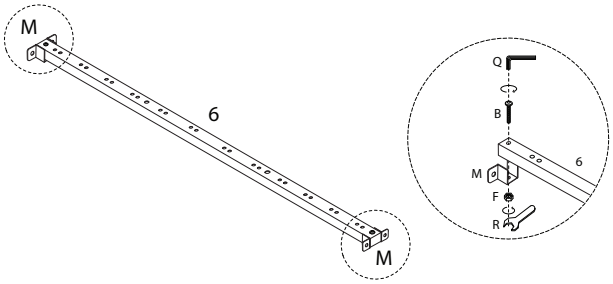

7

B	G	Q
M8 x 35		
x 2	x 2	x 1

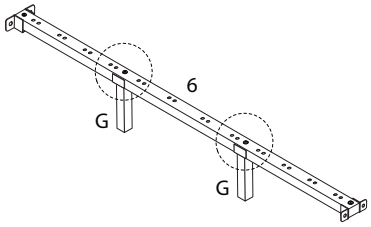

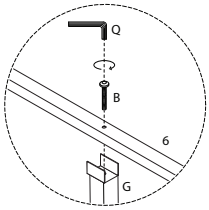

8

A	K	Q
M8 x 20		
x 4	x 2	x 1

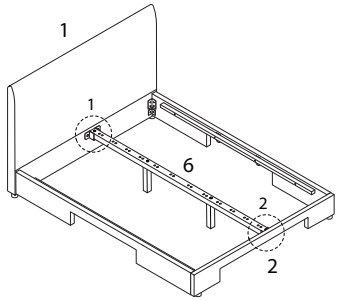

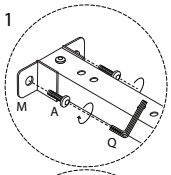

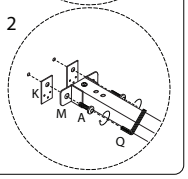

9 x 8

13	J
x 1	x 4

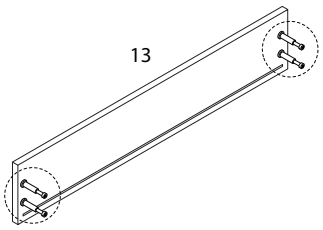

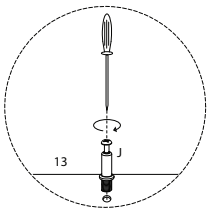

10 x 4

11	12	I
x 1	x 1	x 4

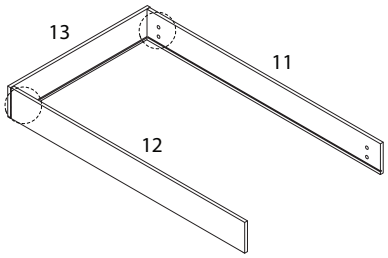

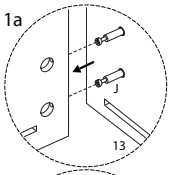

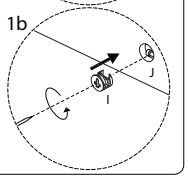

11 x 4

10
x 1

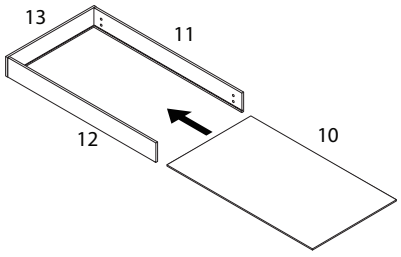

13 x 4

14	B	Q
x 1	M8 x 35	
	x 2	x 1

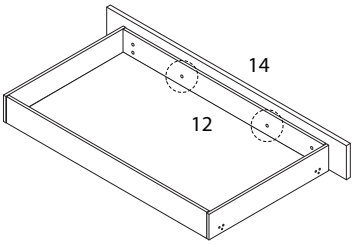

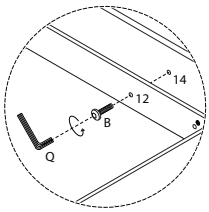

12 x 4

I
x 4

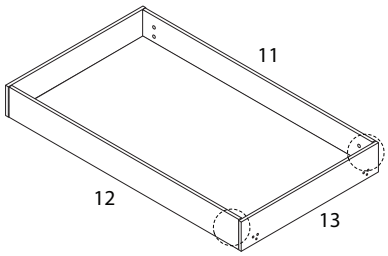

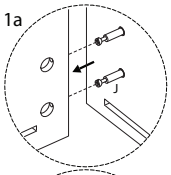

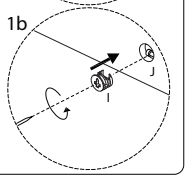

14 x 4

E	H	P
M3.5 x 15		
x 12	x 4	x 1

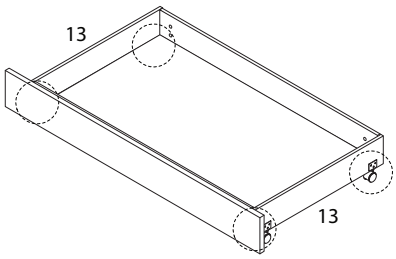

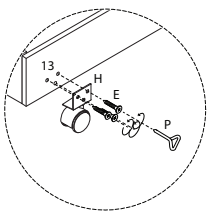

15 x 17

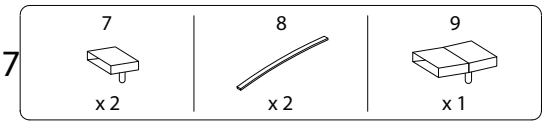

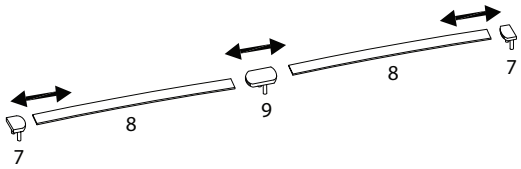

16

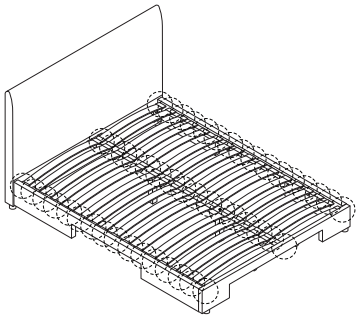

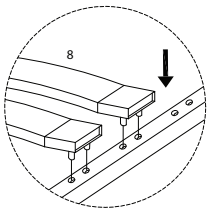

!

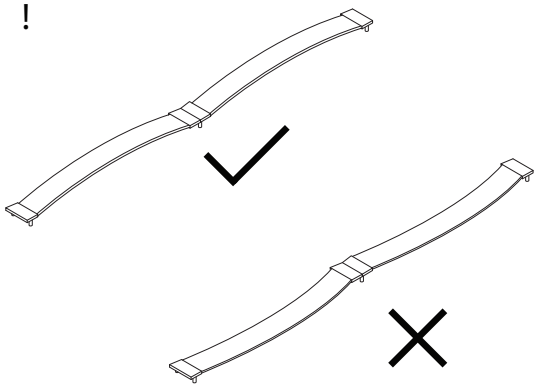

!

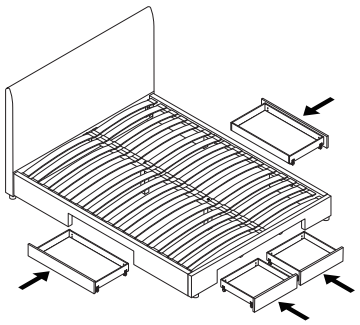

714/SOUTRIN/110725/