NORNALUP

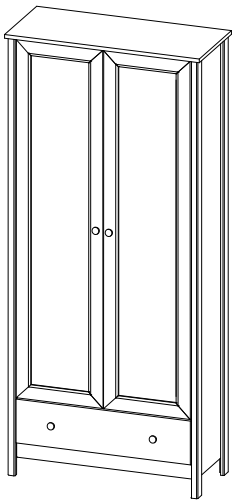

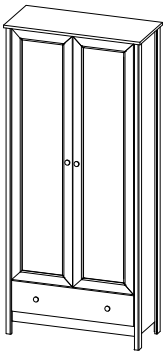

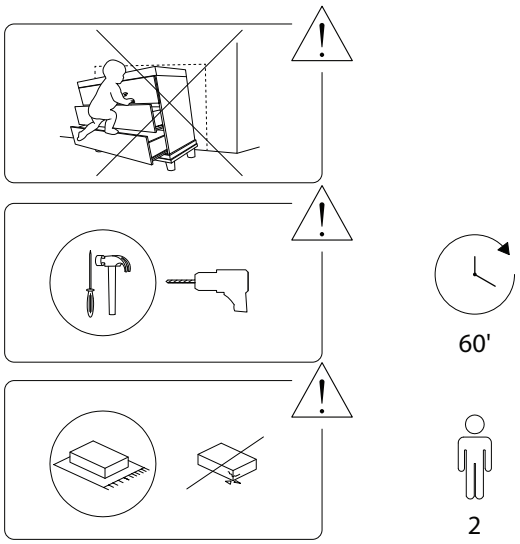

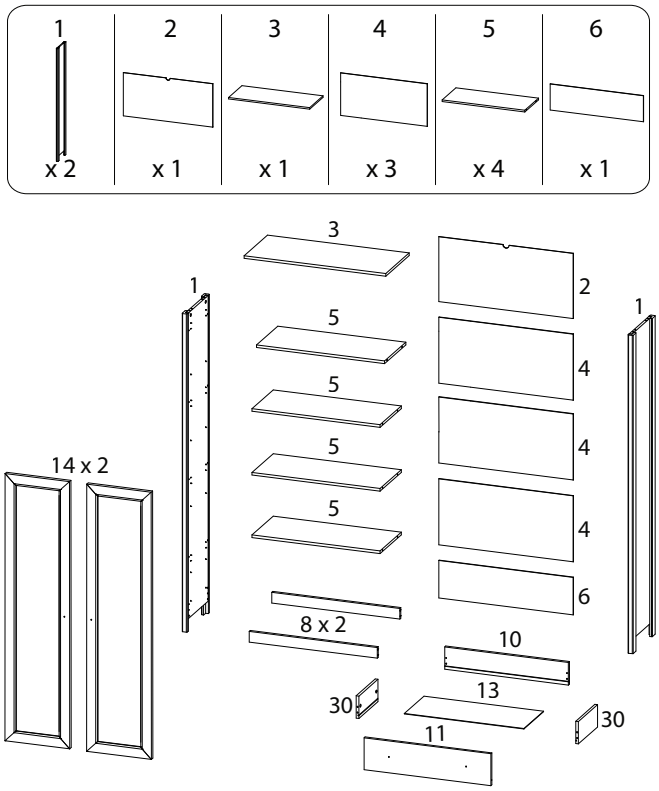

8	10	11	13	14	30
x 2	x 1	x 1	x 1	x 2	x 2

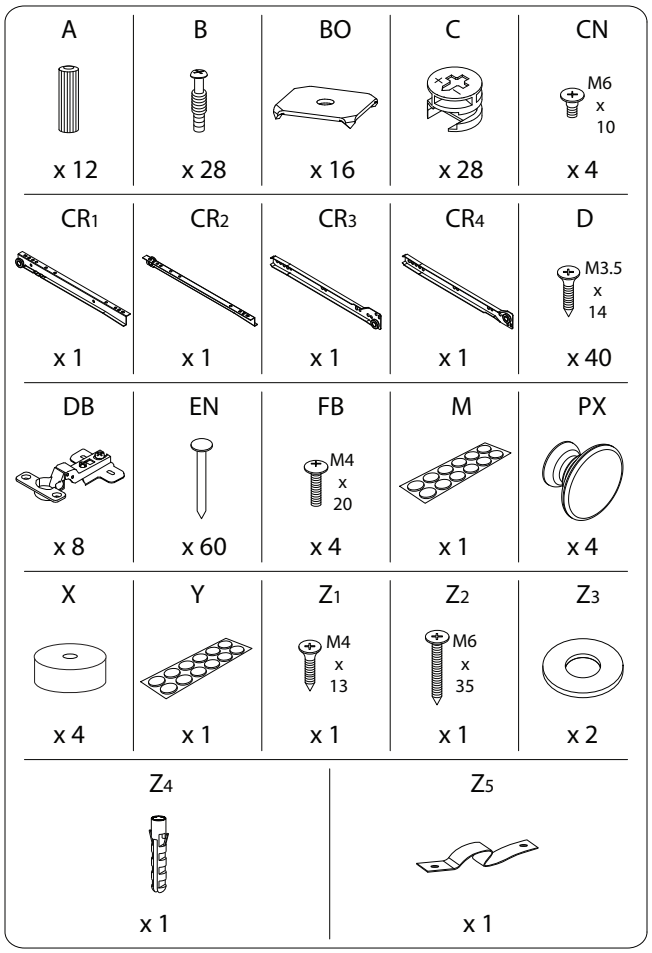

1

1	3	B
x 2	x 1	x 24

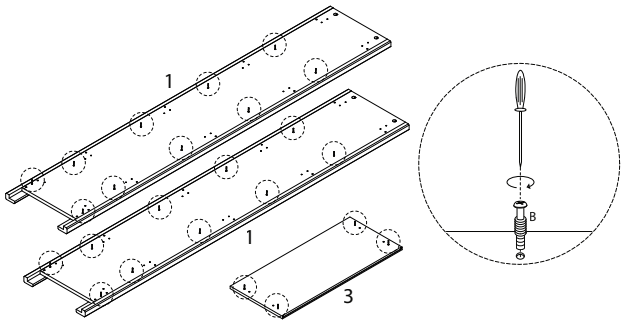

3

CR3	CR4	CN
x 1	x 1	M6 x 10 x 4

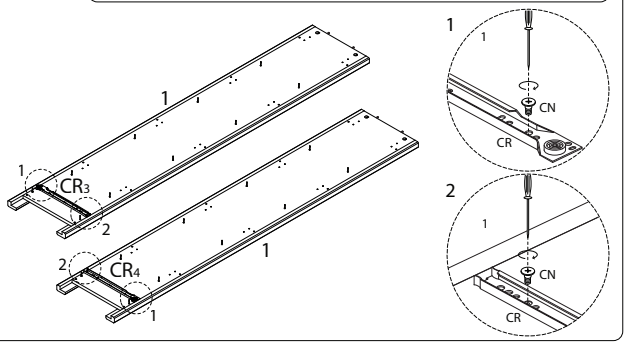

2 x 2

8	A
x 1	x 4

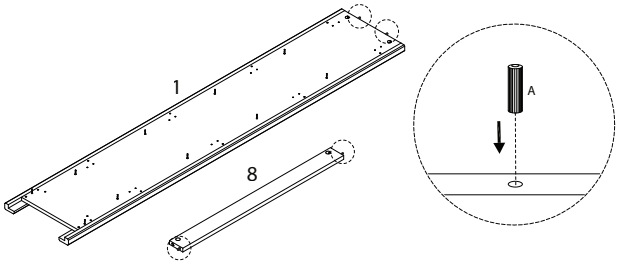

4

5
x 4

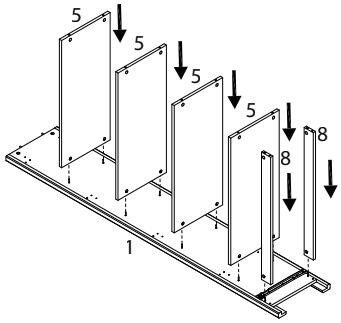

5

C
x 10

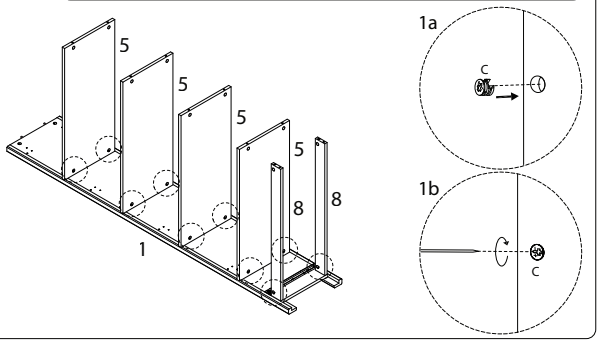

7

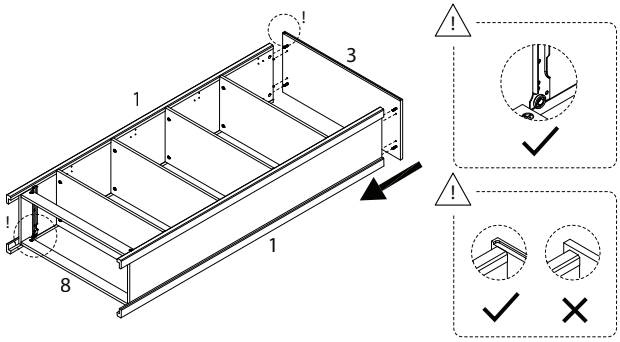

6

C
x 10

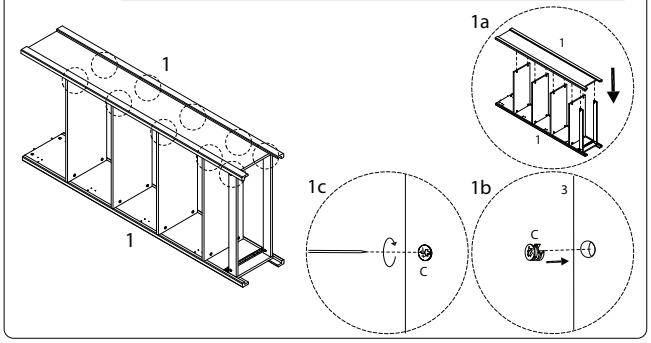

8

C
x 4

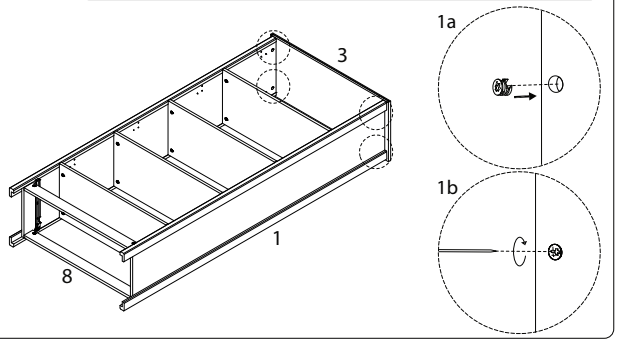

9

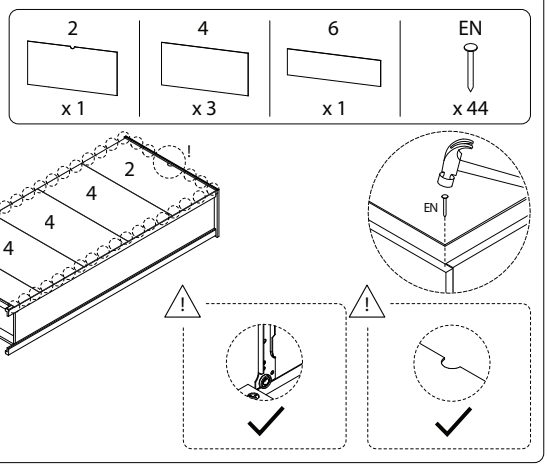

10

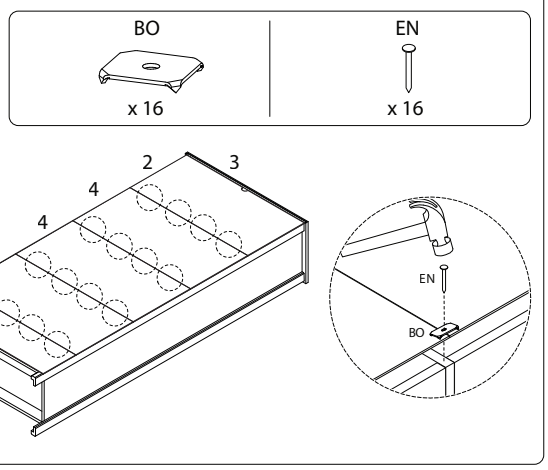

11

12 x 2

13 x 2

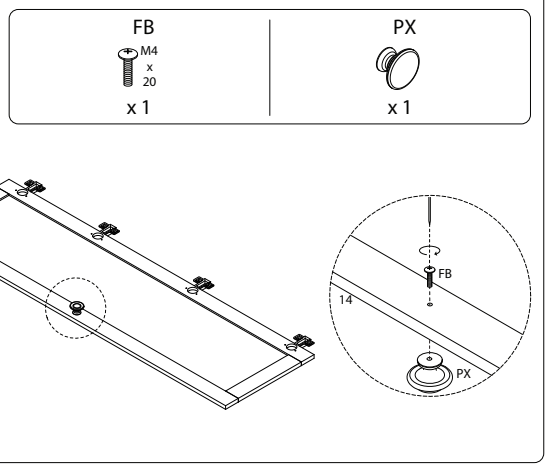

15 x 2

14

16

17

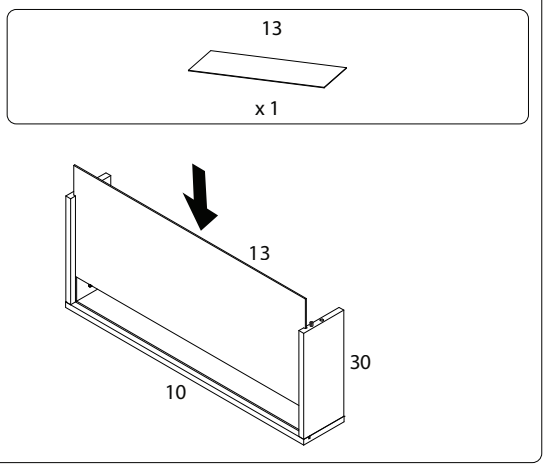

18

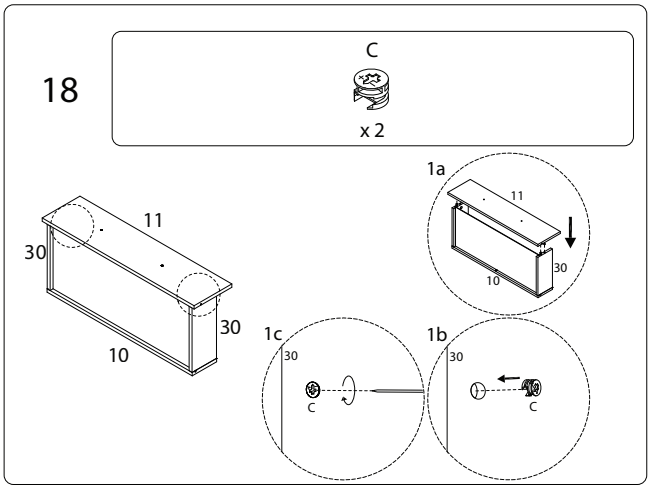

19

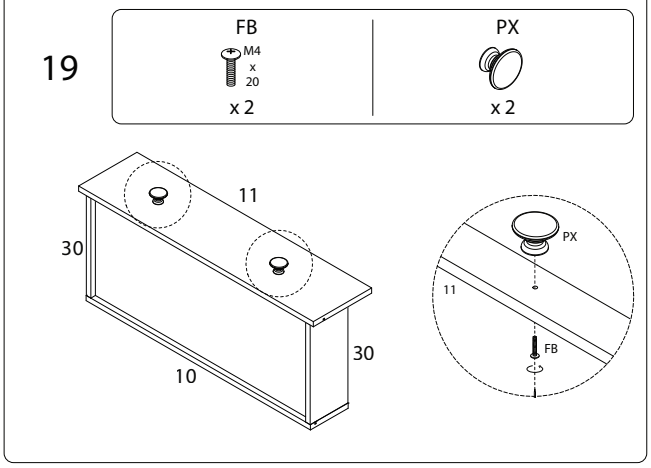

20

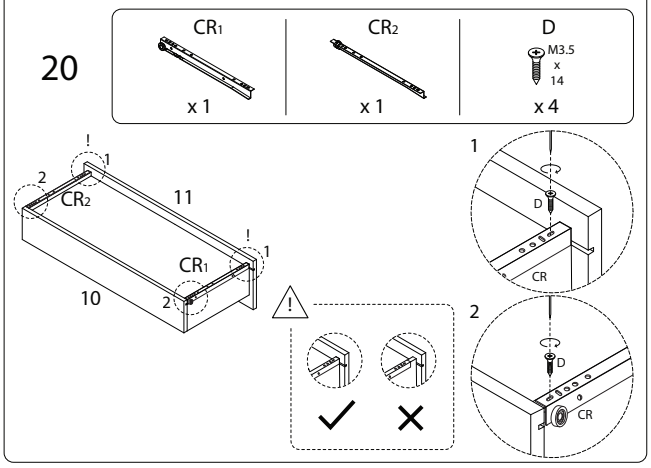

21

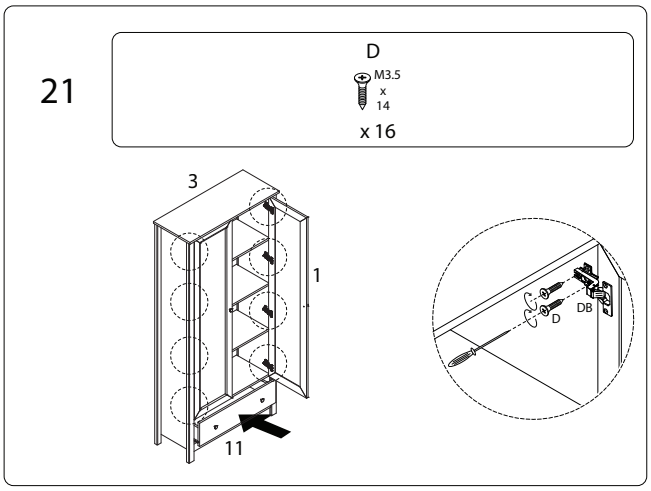

22

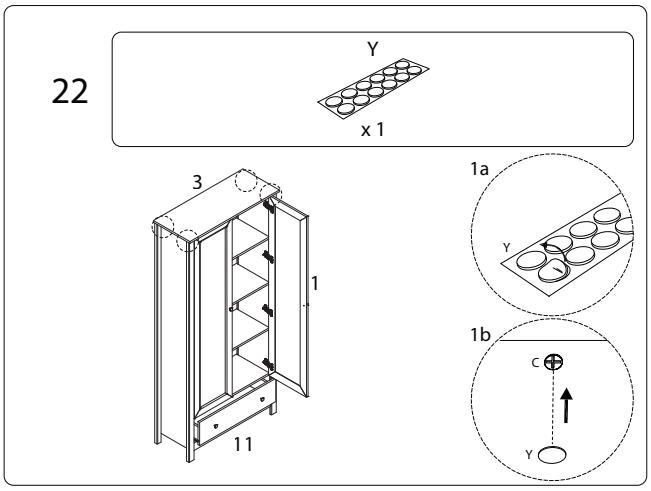

23

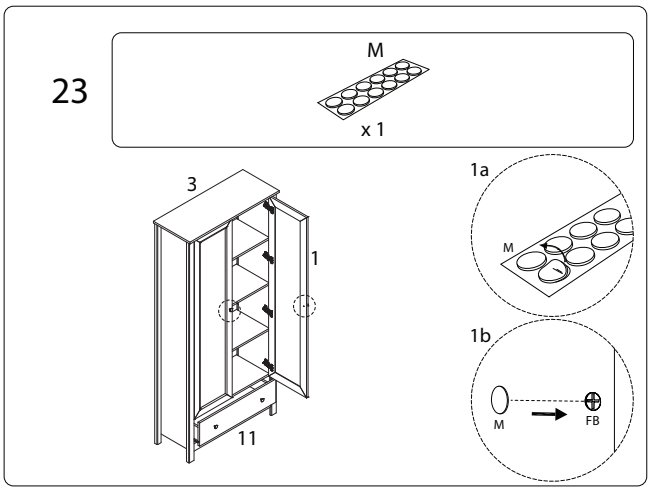

24

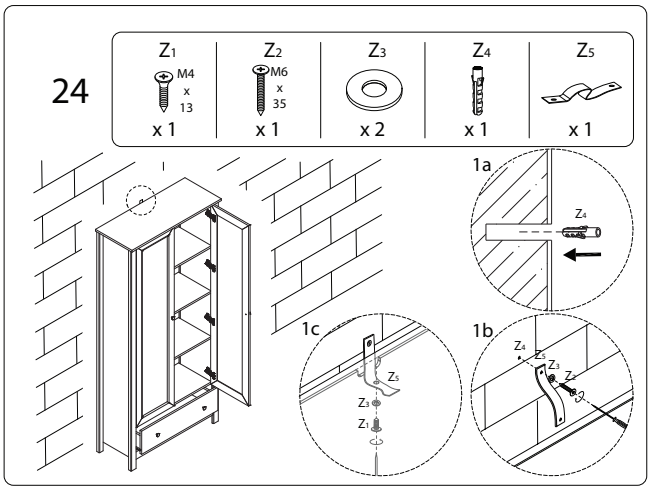

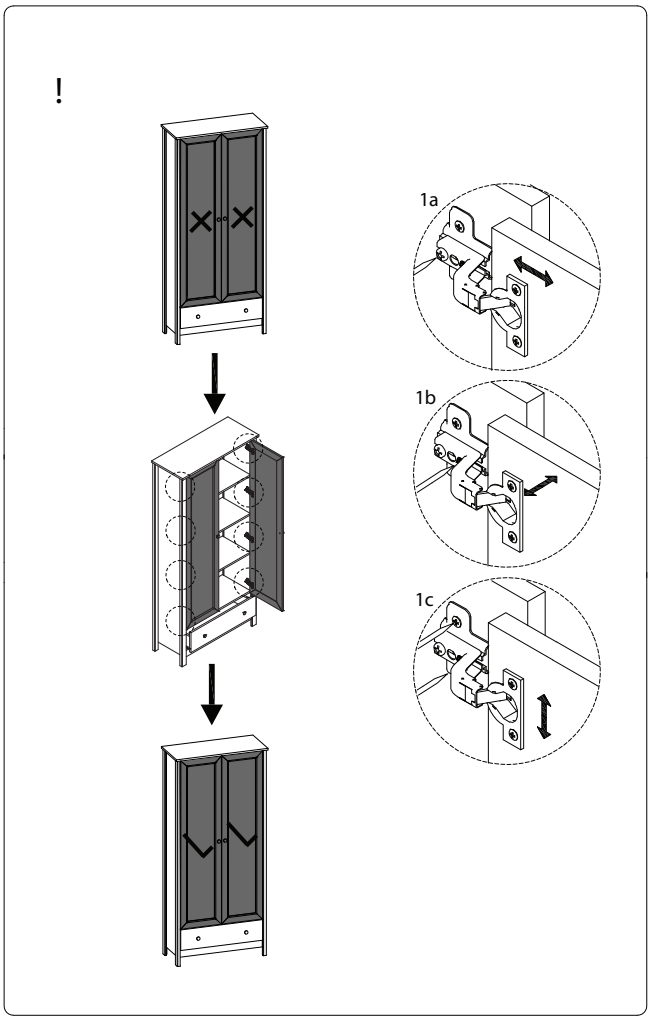

2368/NORNALUP/031124/