YILA

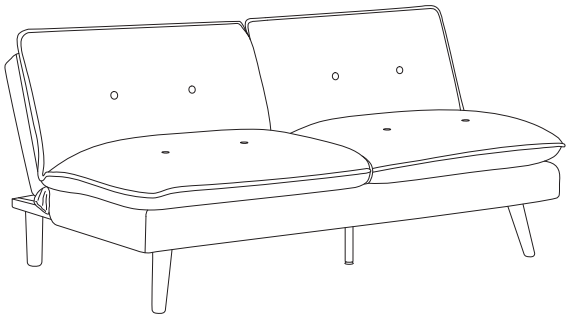

1/6

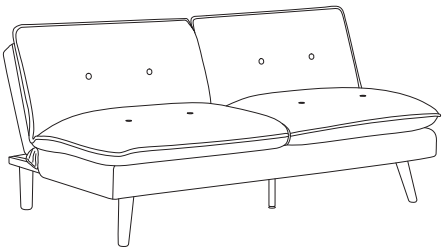

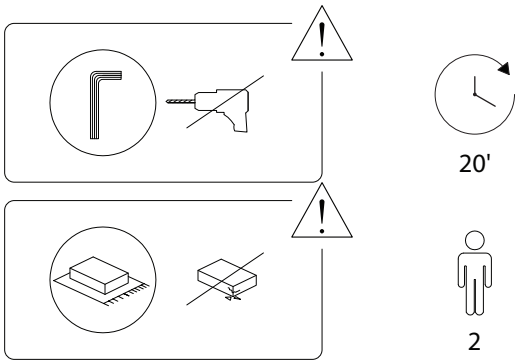

2/6

A	B	C	D
			
x 1	x 2	x 2	x 1

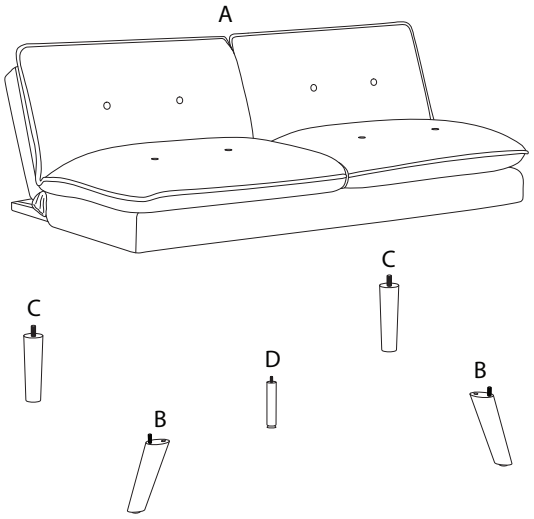

E	F	G	H
 M8 x 67			
x 2	x 2	x 1	x 3

3/6

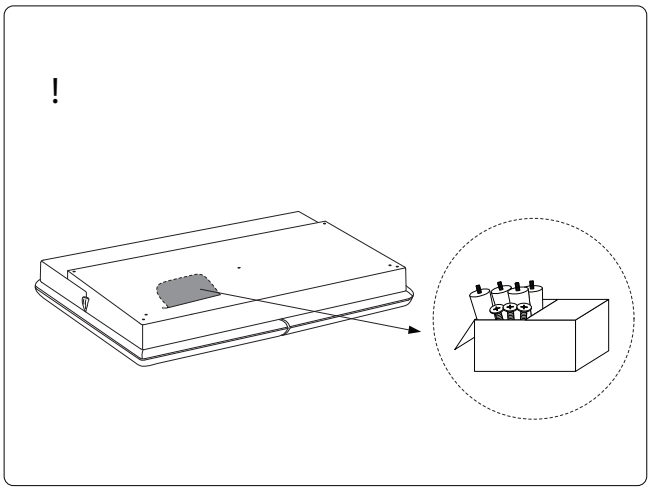

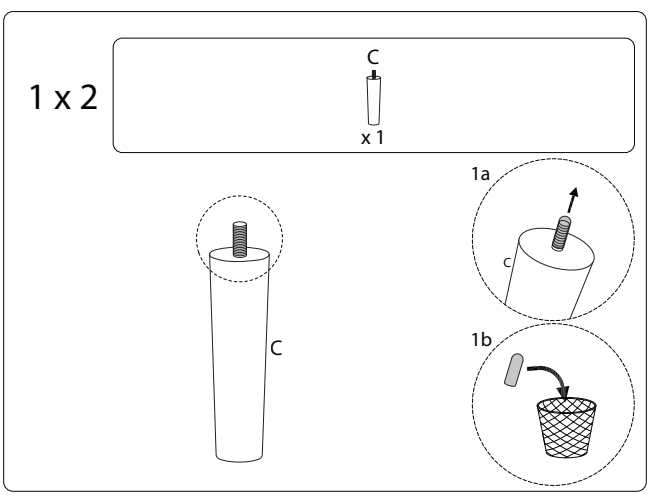

4/6

2

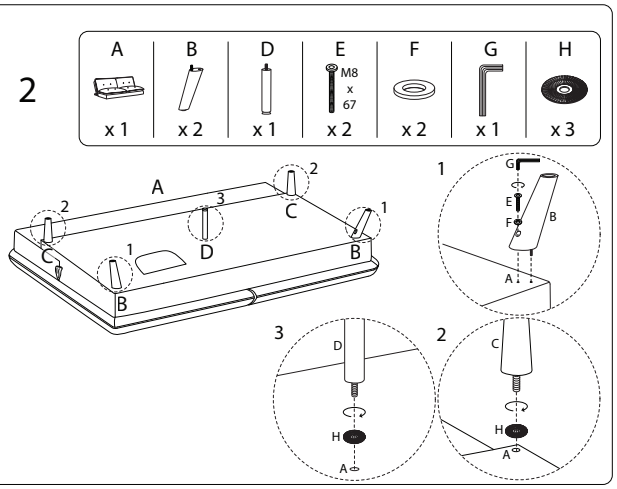
A
B
D
E
M8
x
67
F
G
H
x 1
x 2
x 1
x 2
x 2
x 1
x 3
A
B
C
D
1
2
3
1
G
E
F
B
A
2
C
H
A
3
D
H
A

!

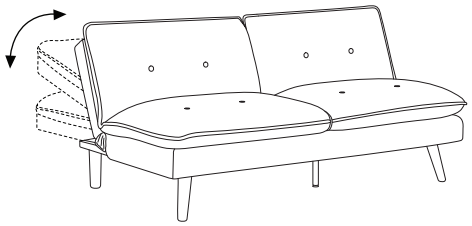

3

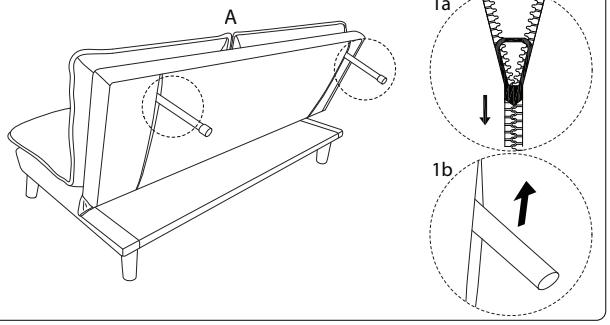
A
1a
1b