ROSELL

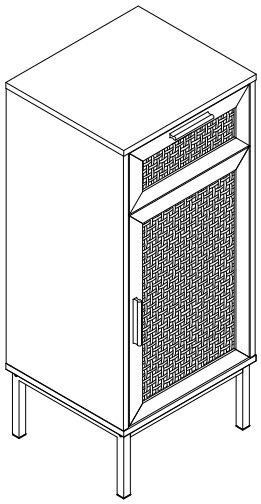

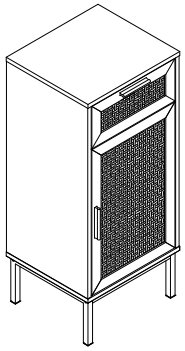

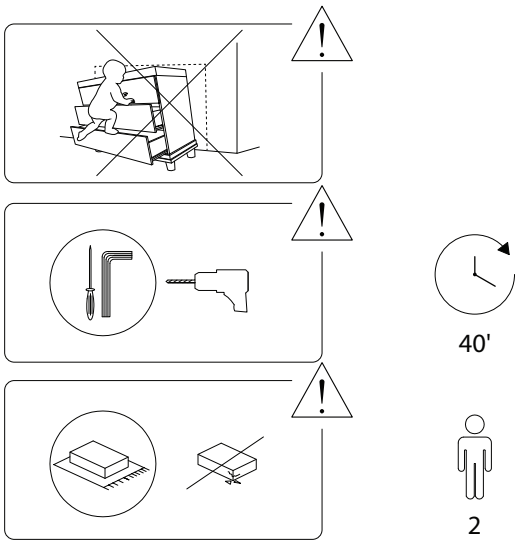
40'
2

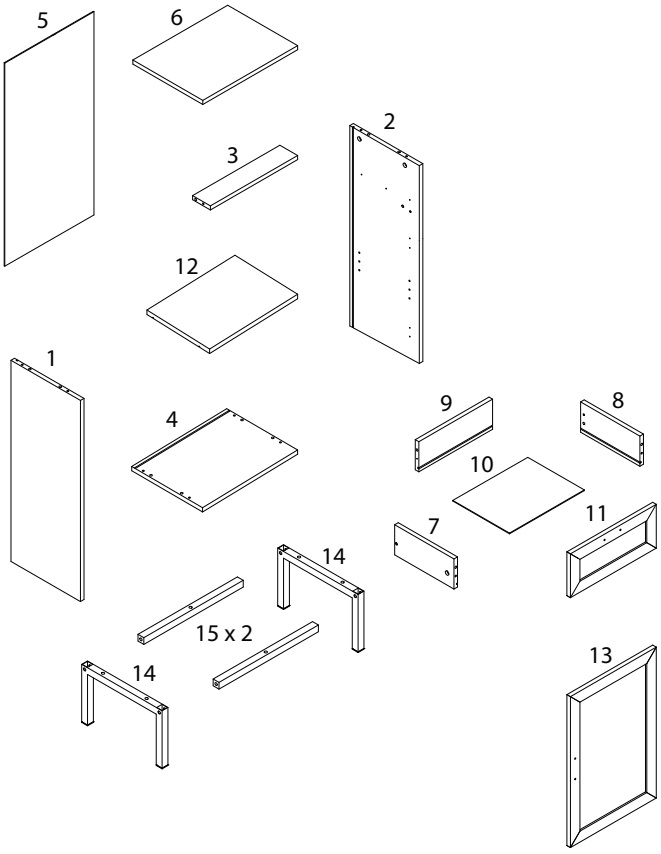
5
6
3
2
12
1
4
9
8
10
7
11
14
15 x 2
14
13

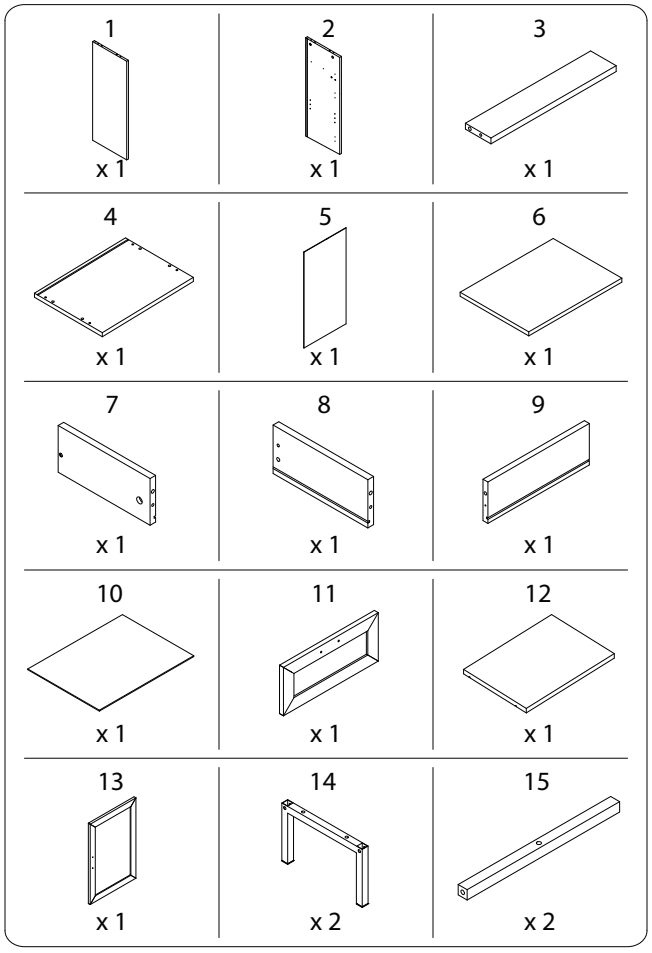
1
x 1
2
x 1
3
x 1
4
x 1
5
x 1
6
x 1
7
x 1
8
x 1
9
x 1
10
x 1
11
x 1
12
x 1
13
x 1
14
x 2
15
x 2

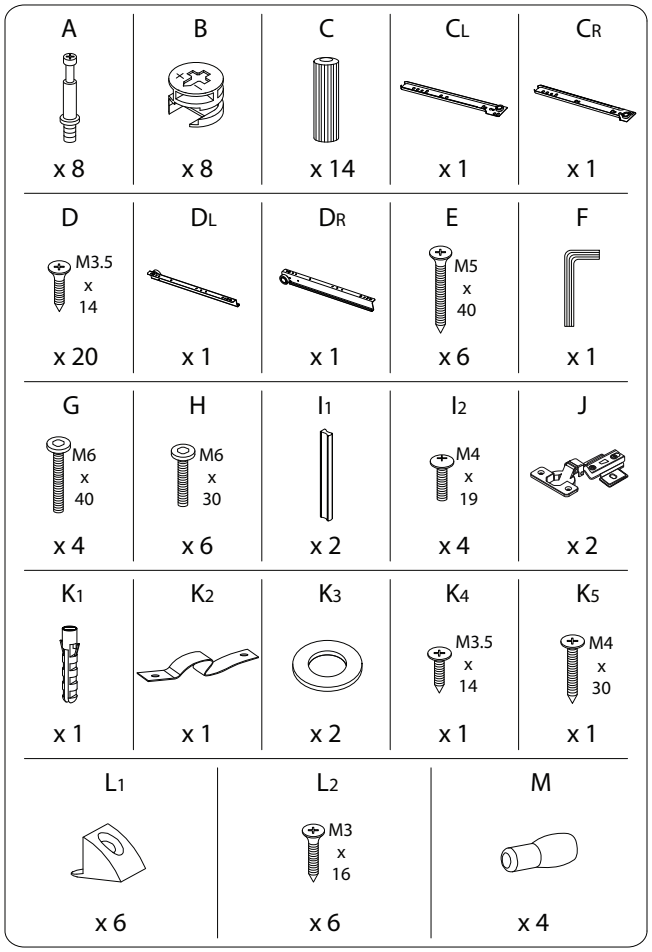
A x 8
B x 8
C x 14
CL x 1
CR x 1
D M3.5 x 14 x 20
DL x 1
DR x 1
E M5 x 40 x 6
F x 1
G M6 x 40 x 4
H M6 x 30 x 6
I1 x 2
I2 M4 x 19 x 4
J x 2
K1 x 1
K2 x 1
K3 x 2
K4 M3.5 x 14 x 1
K5 M4 x 30 x 1
L1 x 6
L2 M3 x 16 x 6
M x 4

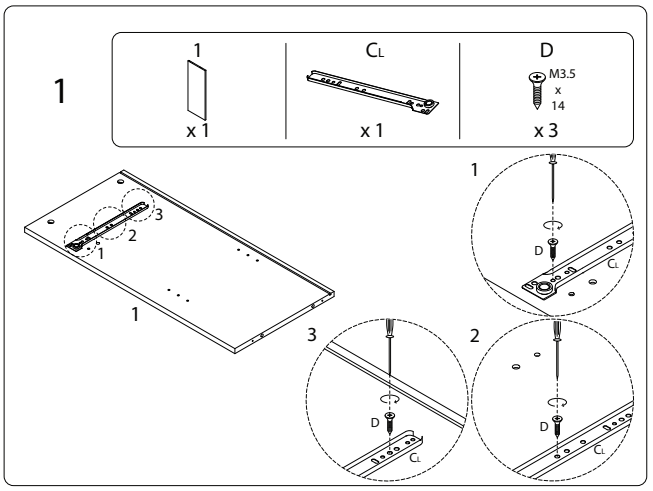
1
1 x 1
CL x 1
D M3.5 x 14 x 3

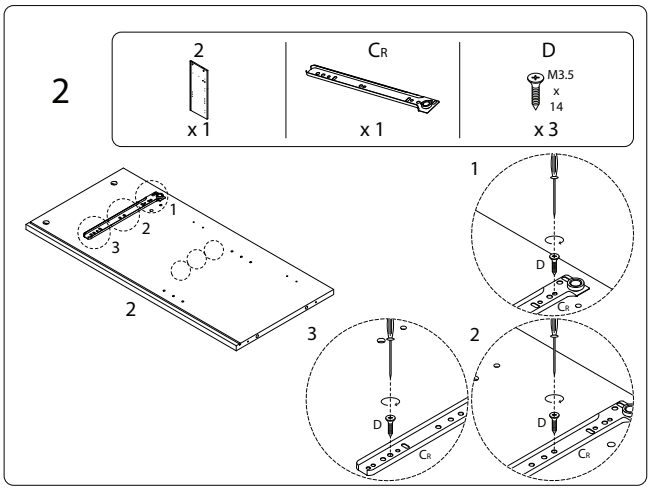
2
2 x 1
CR x 1
D M3.5 x 14 x 3

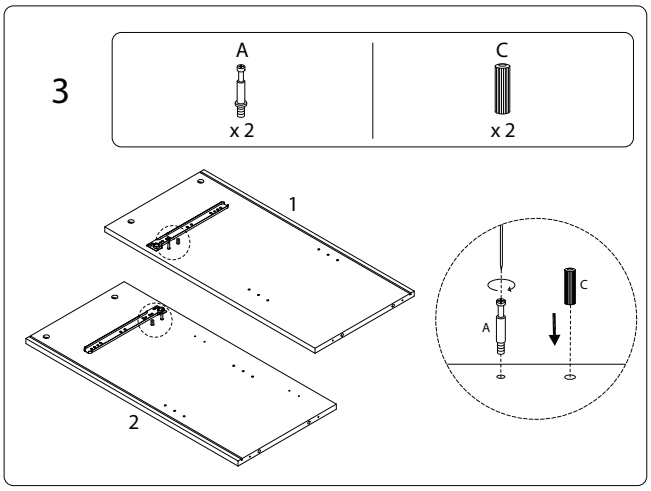
3
A x 2
C x 2

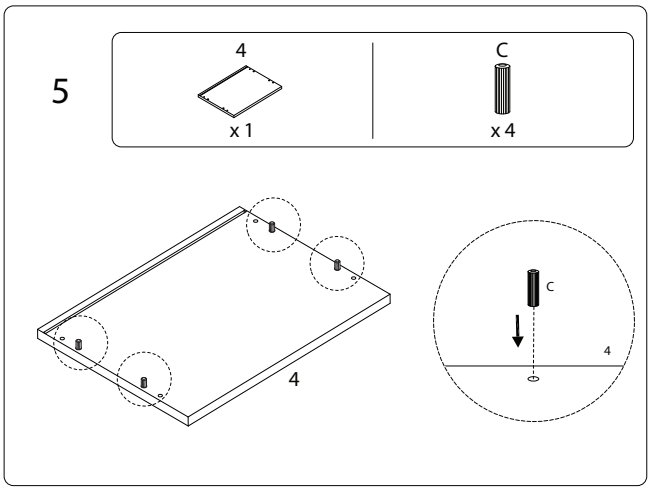
5
4 x 1
C x 4

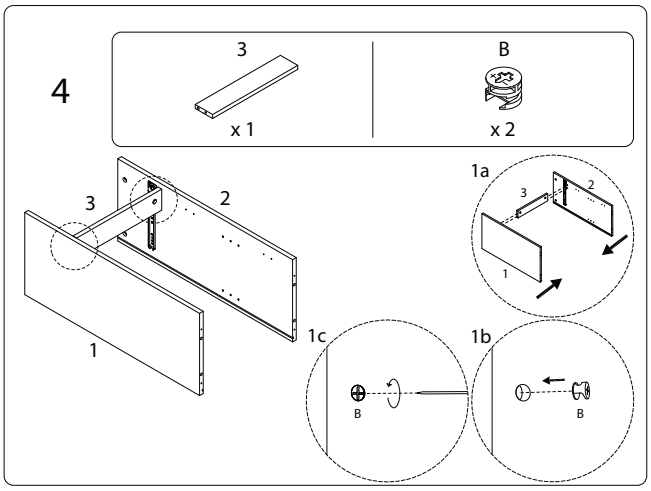
4
3 x 1
B x 2

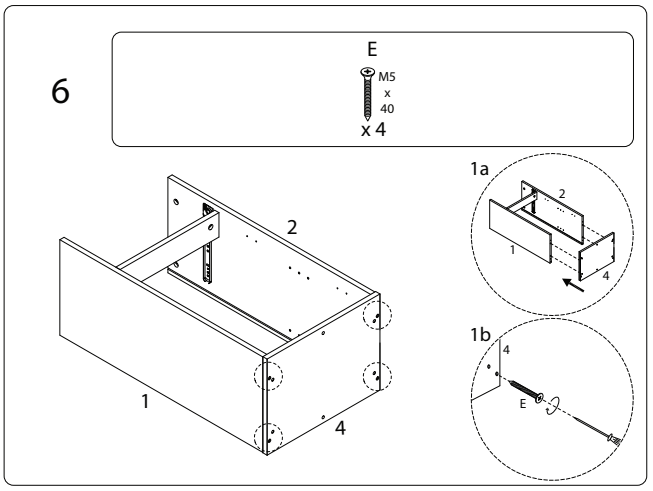
6
E M5 x 40 x 4

7

14	15	G	F
x 2	x 2	M6 x 40 x 4	x 1

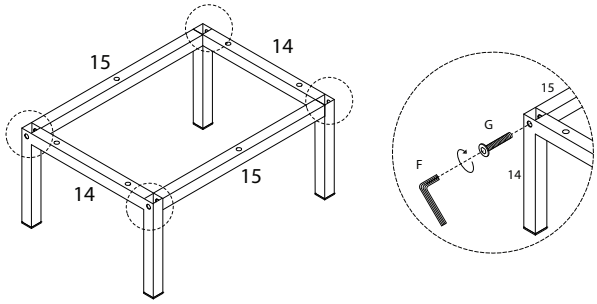

8

H	F
M6 x 30 x 6	x 1

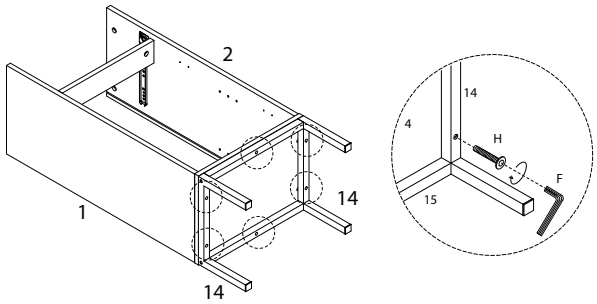

9

5
x 1

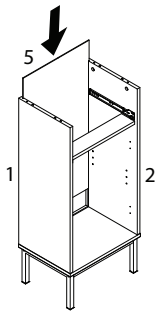

10

6	A	C
x 1	x 4	x 4

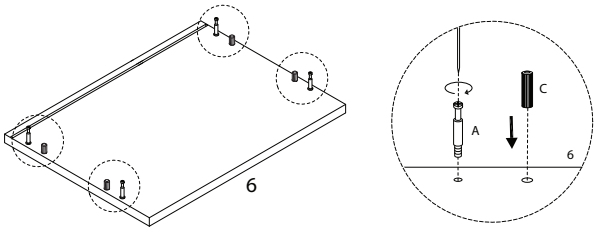

11

B
x 4

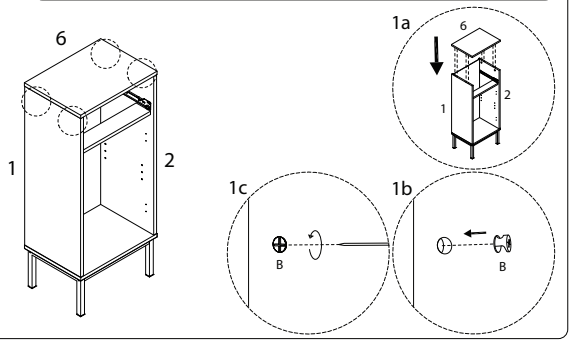

12

L_1	L_2
x 6	M3 x 16 x 6

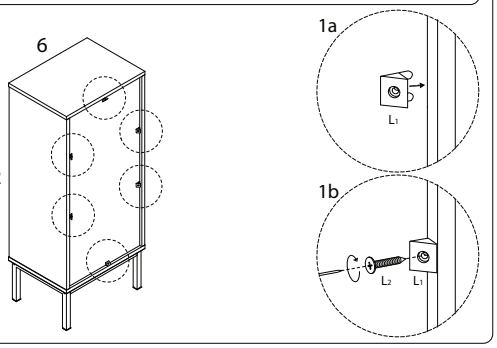

13

9	C
x 1	x 2

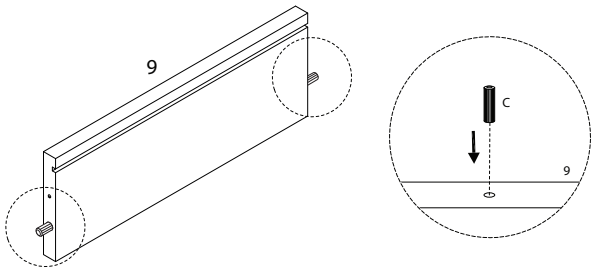

14

7	8
x 1	x 1

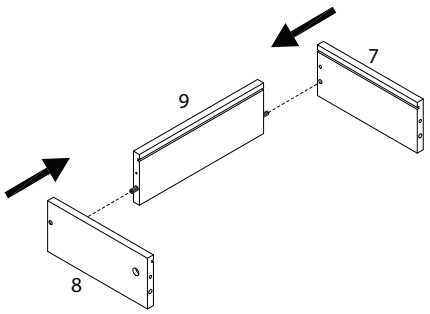

15

E
M5 x 40
x 2

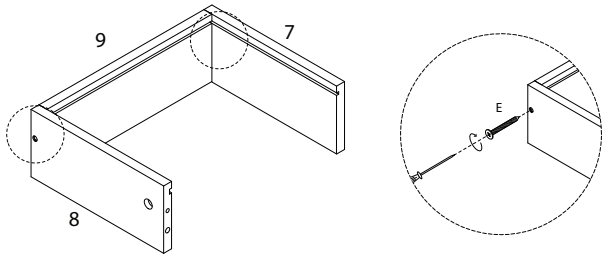

16

10
x 1

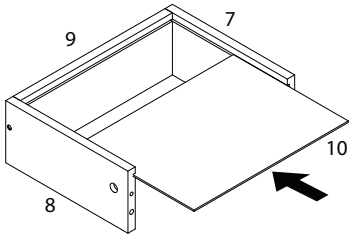

17

11	I_1	I_2
x 1	x 1	M4 x 19 x 2

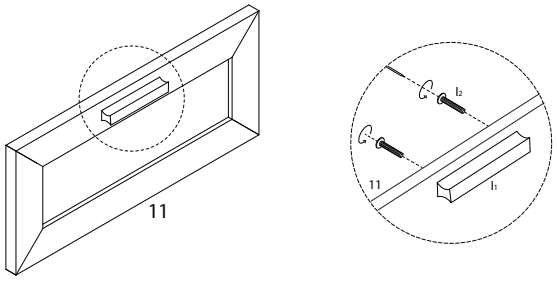

18

A	C
x 2	x 2

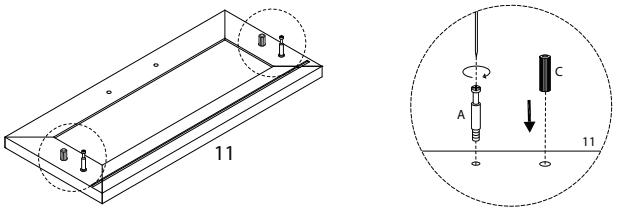

19

B
x 2

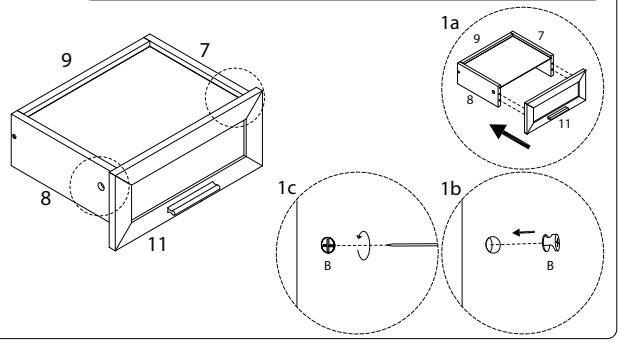

21

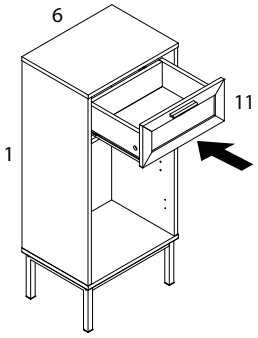

20

D_L	D_R	D
x 1	x 1	M3.5 x 14 x 6

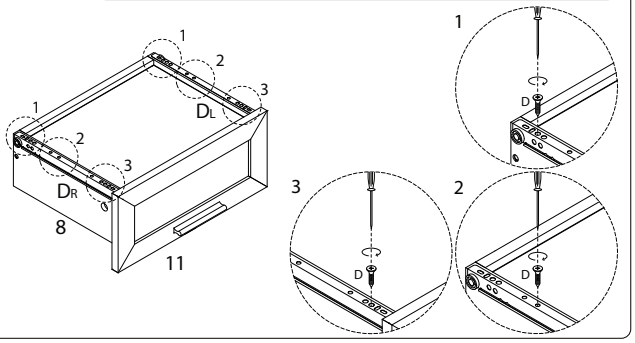

22

M
x 4

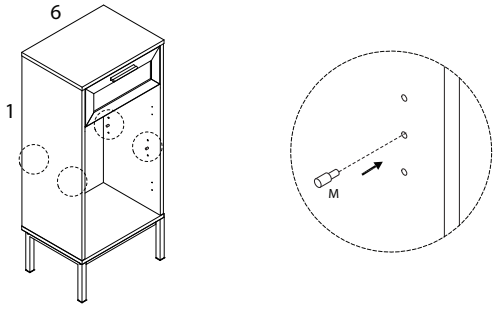

23

12
x 1

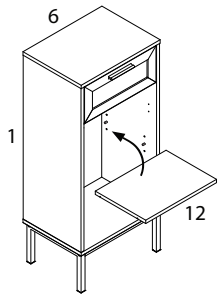

24

13	D	J
x 1	M3.5 x 14 x 4	x 2

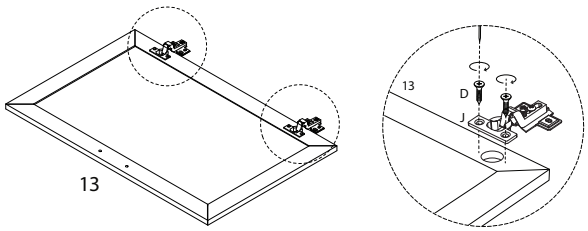

25

I_1	I_2
x 1	M4 x 19 x 2

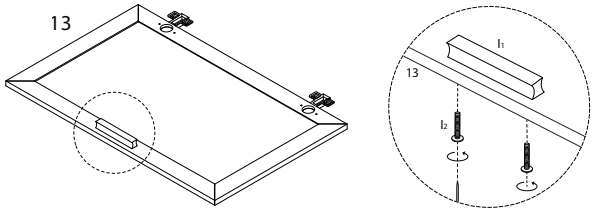

26

D
M3.5 x 14 x 4

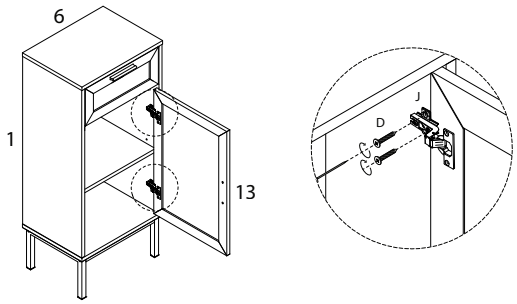

27

K_1	K_2	K_3	K_4	K_5
x 1	x 1	x 2	M3.5 x 14 x 1	M4 x 30 x 1

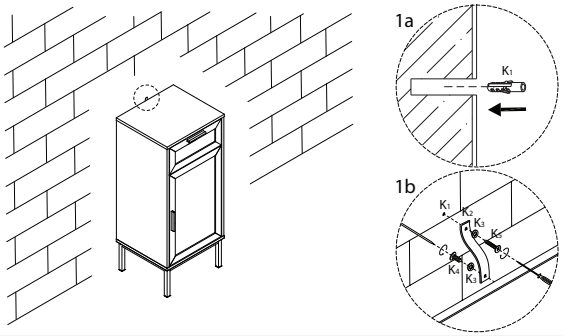
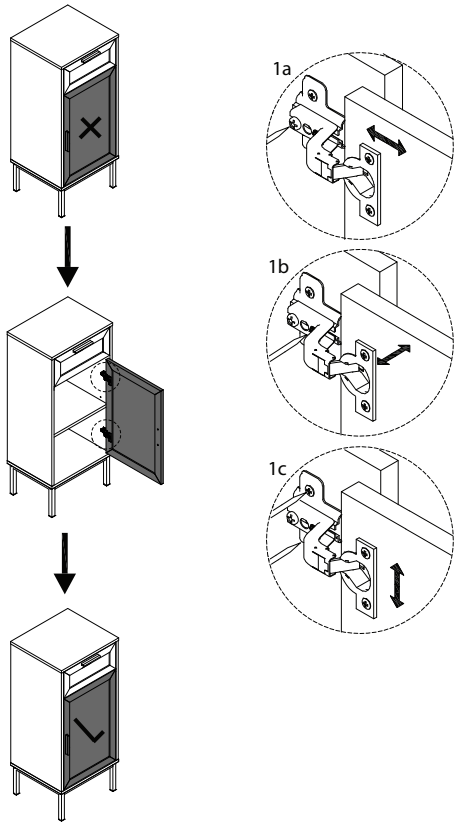
!