KENORA

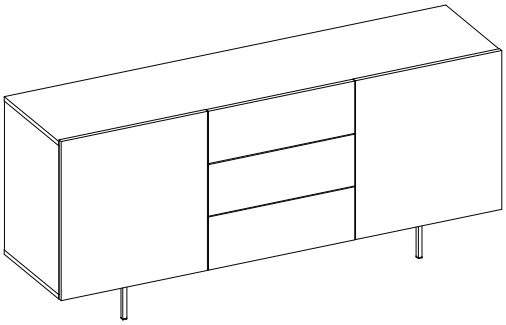

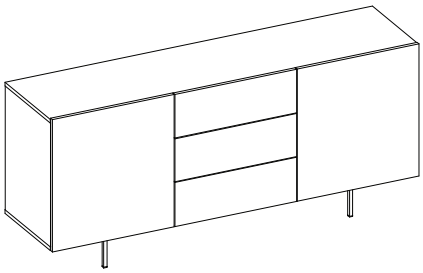

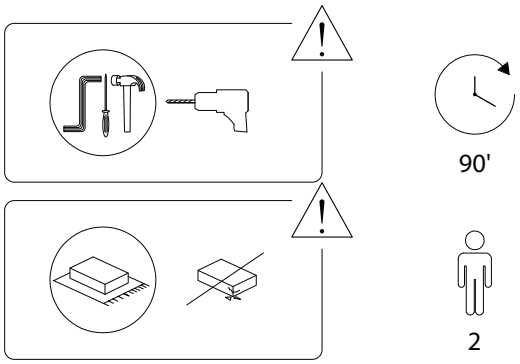

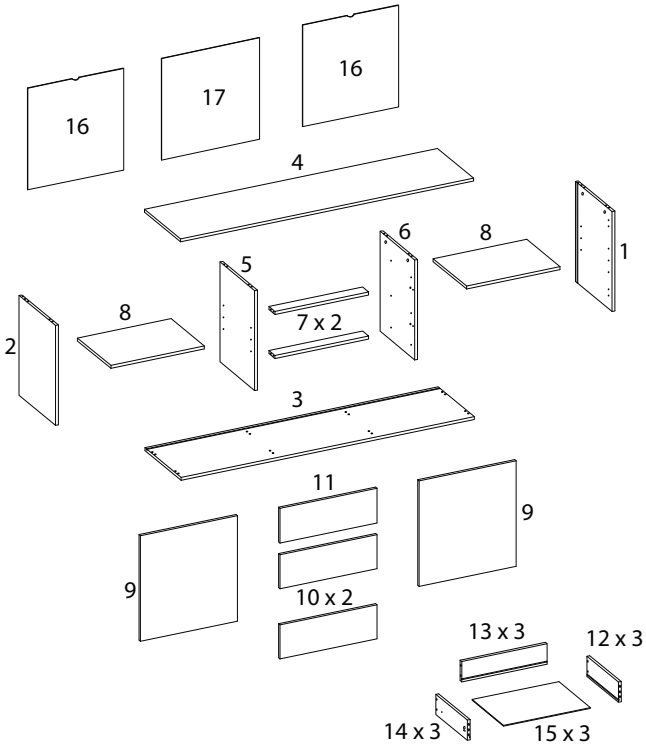

1	2
	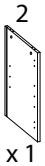
x 1	x 1

3	4	5
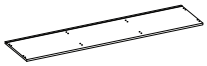		
x 1	x 1	x 1
6	7	8
		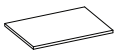
x 1	x 2	x 2
9	10	11
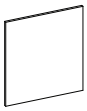		
x 2	x 2	x 1
12	13	14
x 3	x 3	x 3
15	16	17
		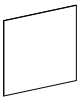
x 3	x 2	x 1

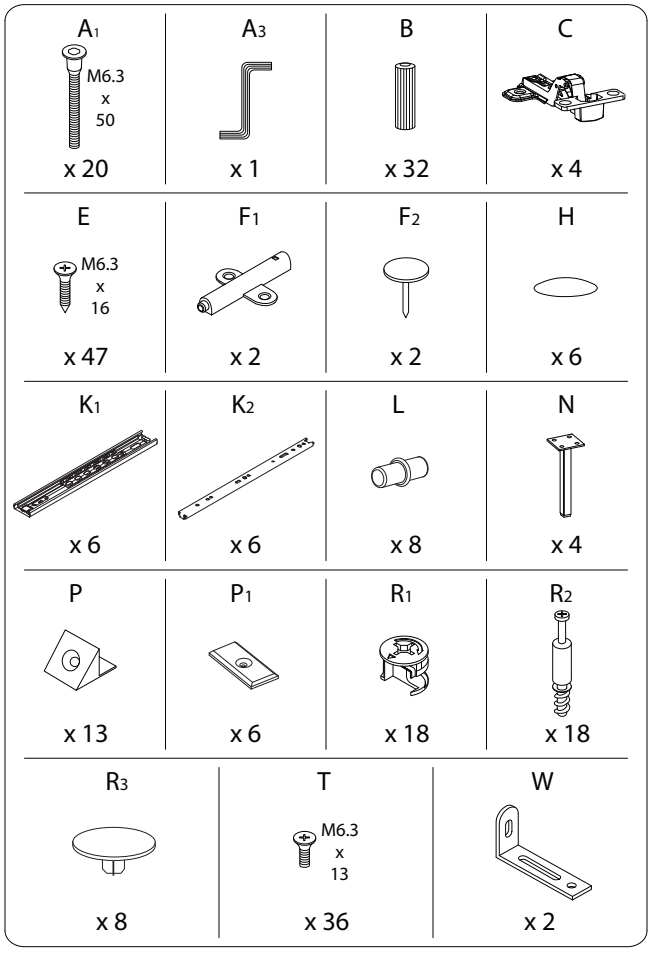
A1
M6.3 x 50
x 20
A3
x 1
B
x 32
C
x 4
E
M6.3 x 16
x 47
F1
x 2
F2
x 2
H
x 6
K1
x 6
K2
x 6
L
x 8
N
x 4
P
x 13
P1
x 6
R1
x 18
R2
x 18
R3
x 8
T
M6.3 x 13
x 36
W
x 2

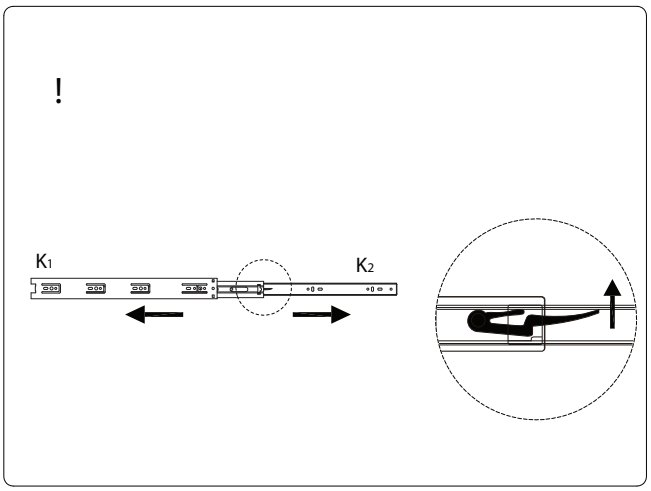
!
K1
K2

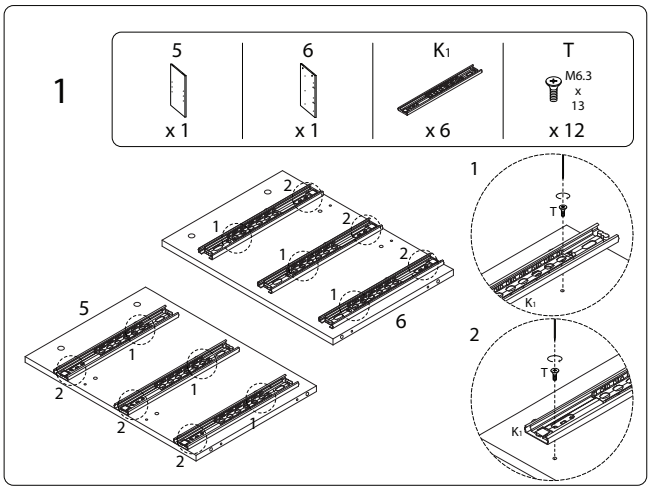
1
5
x 1
6
x 1
K1
x 6
T
M6.3 x 13
x 12
1
2
3
4
5
6
T
K1

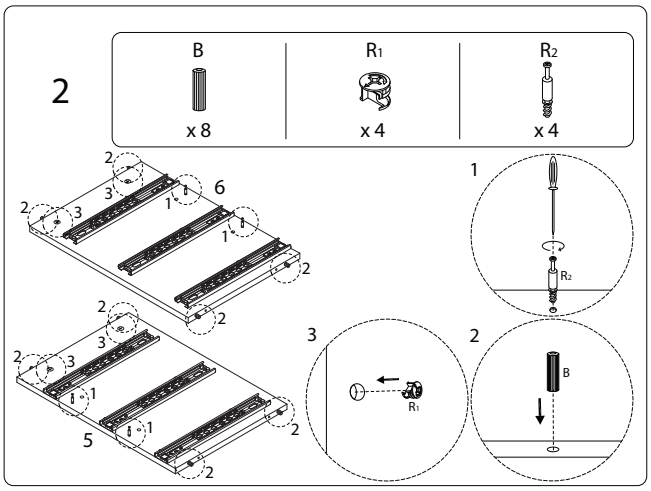
2
B
x 8
R1
x 4
R2
x 4
1
2
3
4
5
6
R2
R1
B

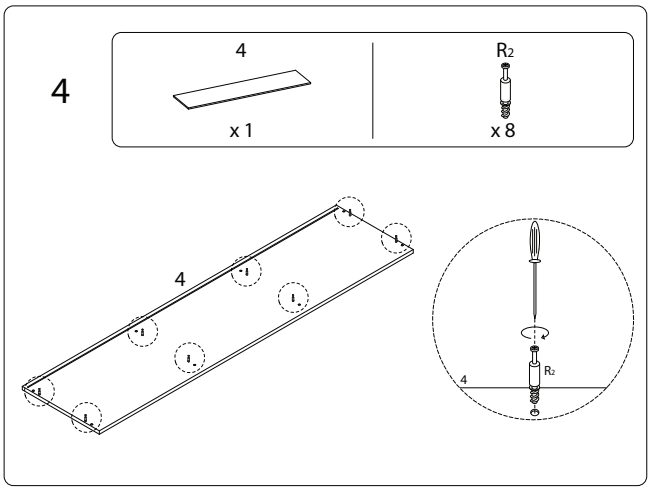
4
4
x 1
R2
x 8
4
R2

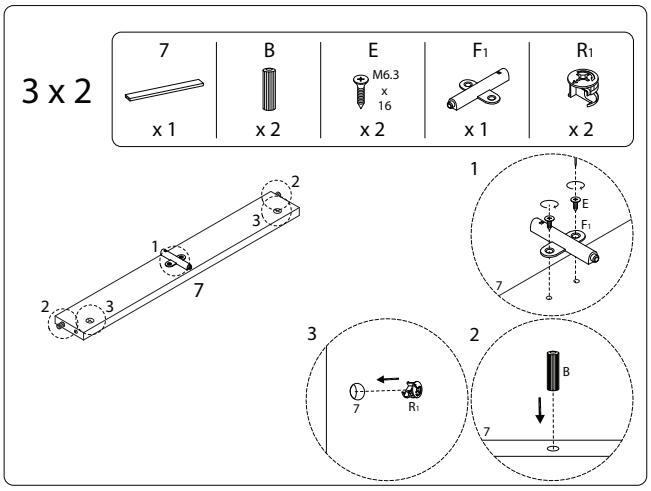
3 x 2
7
x 1
B
x 2
E
M6.3 x 16
x 2
F1
x 1
R1
x 2
1
2
3
7
E
F1
R1
B

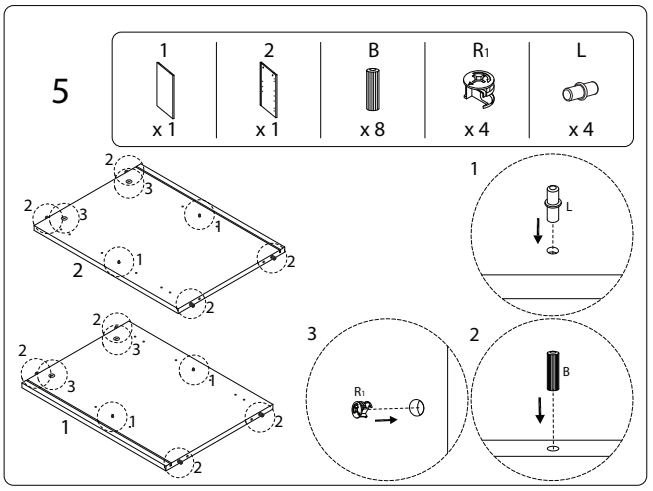
5
1
x 1
2
x 1
B
x 8
R1
x 4
L
x 4
1
2
3
L
R1
B

6

3	N	T
x 1	x 4	M6.3 x 13 x 16

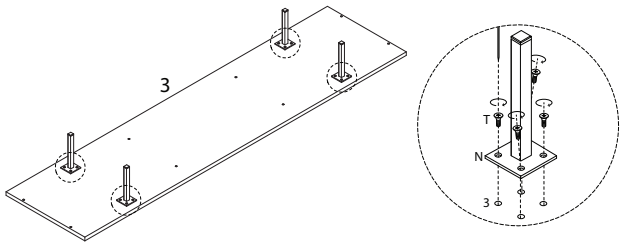

7

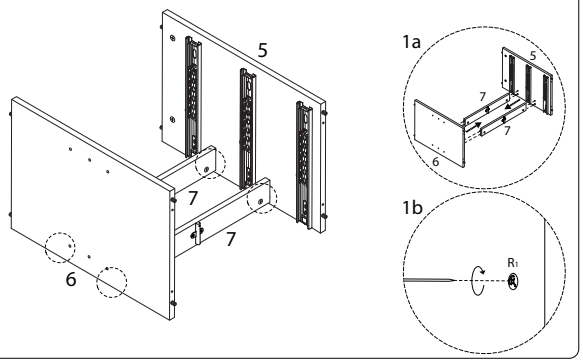

8

L
x 4

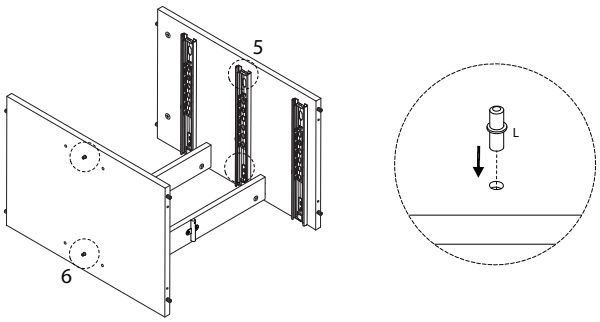

9

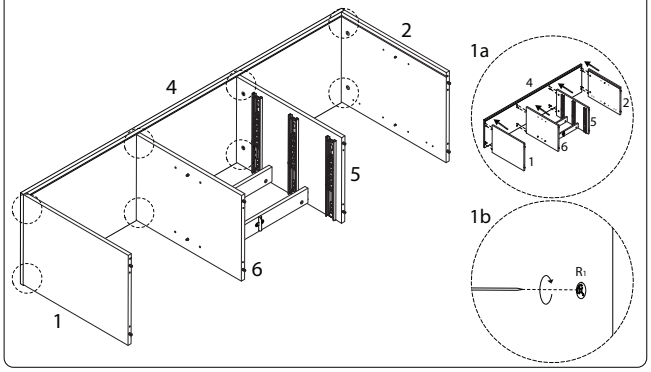

10

16	17
x 2	x 1

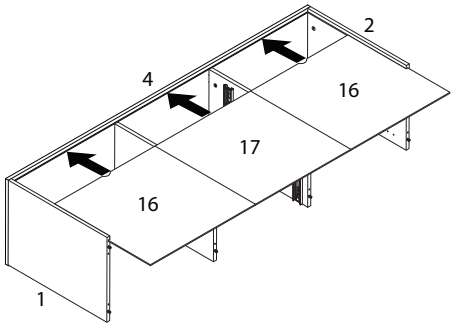

11

A1	A3
M6.3 x 50 x 8	x 1

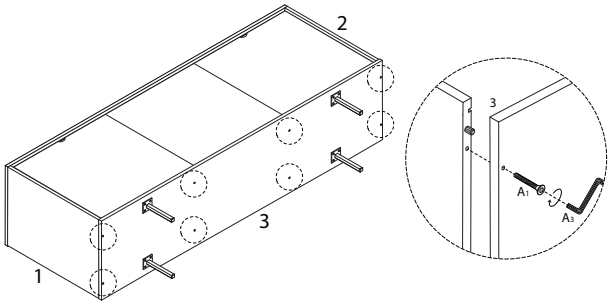

12

E	P
M6.3 x 16 x 10	x 10

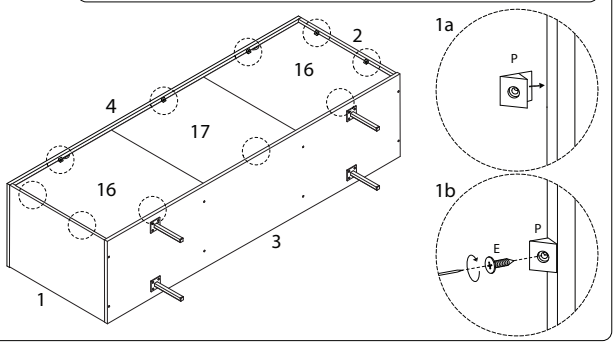

13

E	P1
M6.3 x 16 x 6	x 6

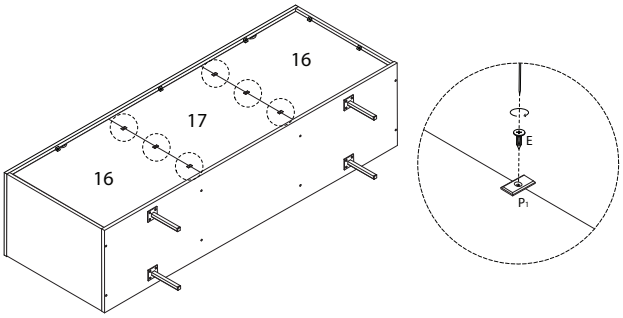

14

E	W
M6.3 x 16	
x 4	x 2

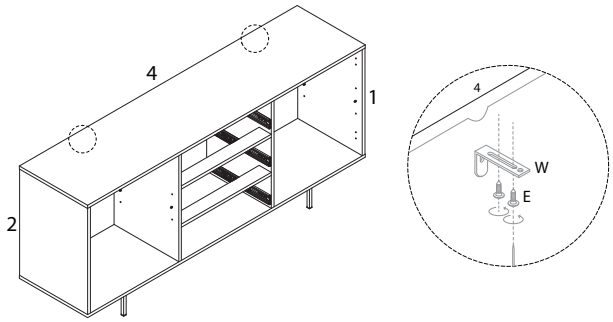

!

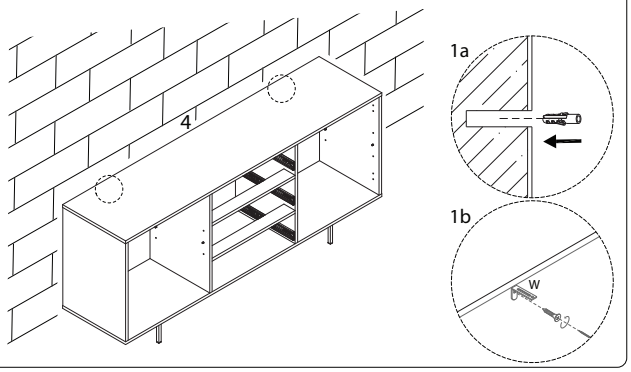

15

10	11	F2	R2
x 2	x 1	x 2	x 6

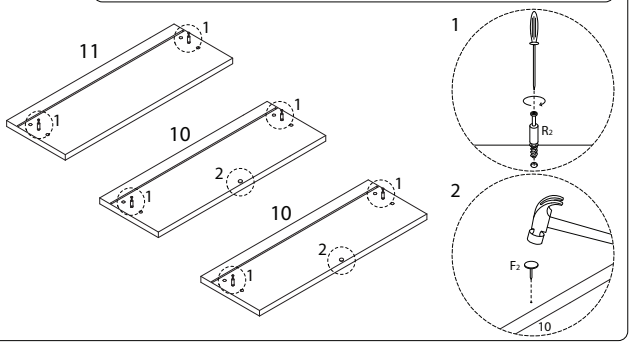

16 x 3

12	14	B	R1
x 1	x 1	x 4	x 2

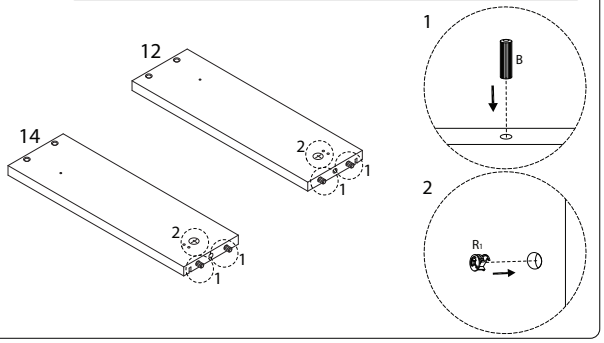

17

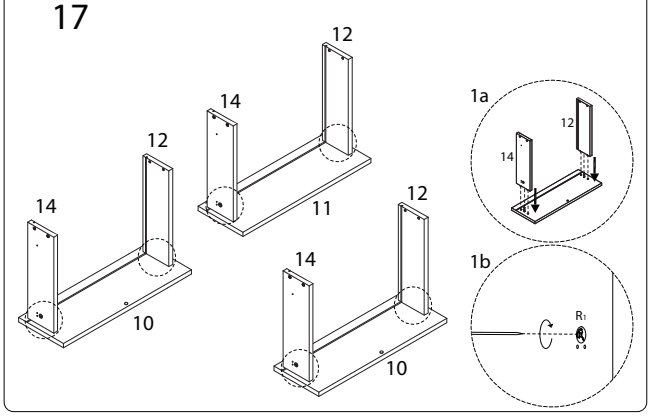

18

15
x 3

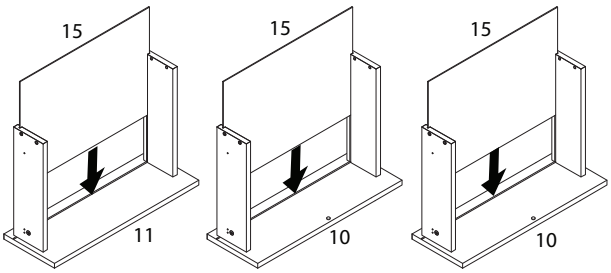

19

13	A1	A3
x 3	M6.3 x 50	
	x 12	x 1

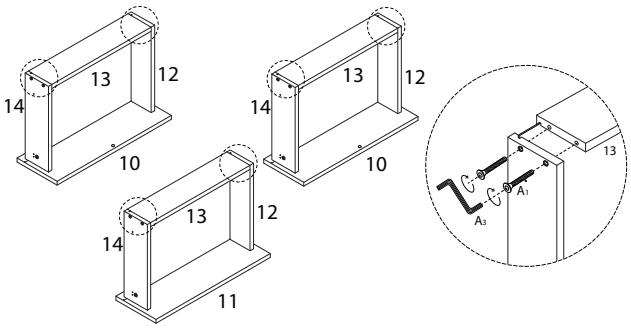

20 x 3

E	K2
M6.3 x 16	
x 4	x 2

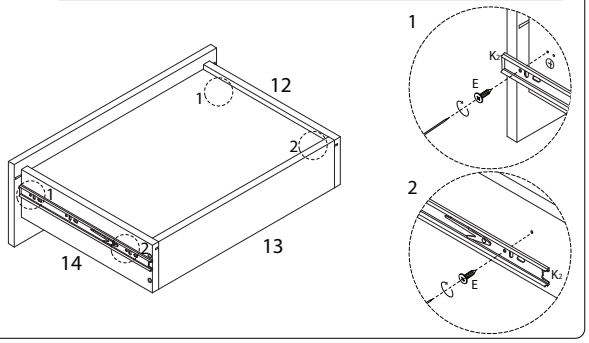

21 x 3

E	P
M6.3 x 16	
x 1	x 1

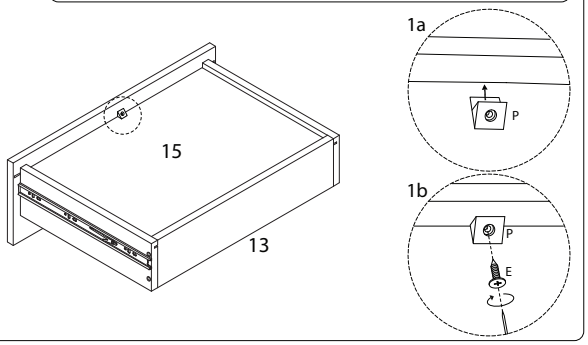

22

R3
x 8

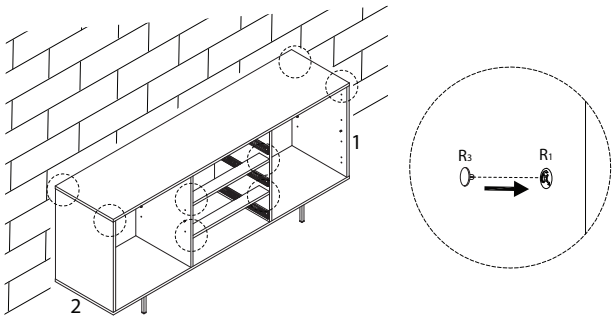

23

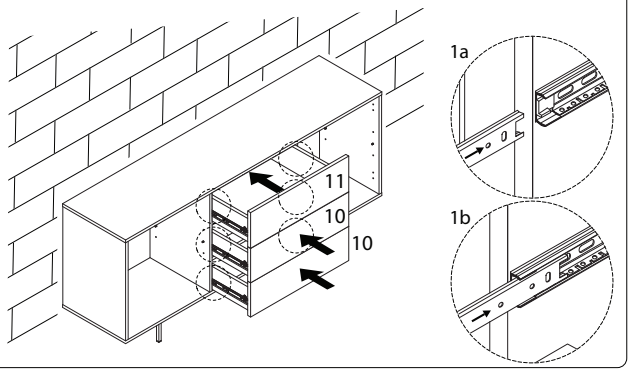

24

8
x 2

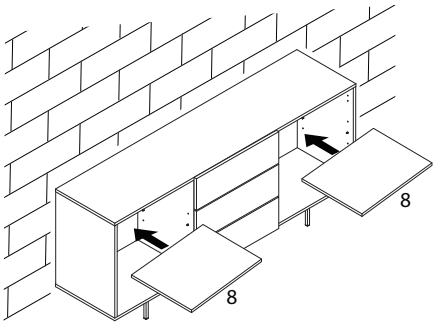

25 x 2

9	C	E	H
		M6.3 x 16	
x 1	x 2	x 4	x 2

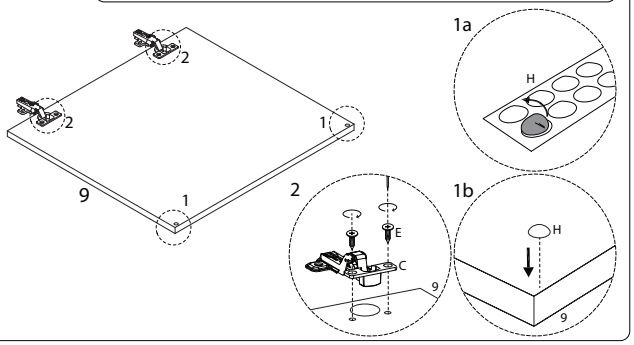

26

T
M6.3 x 13
x 8

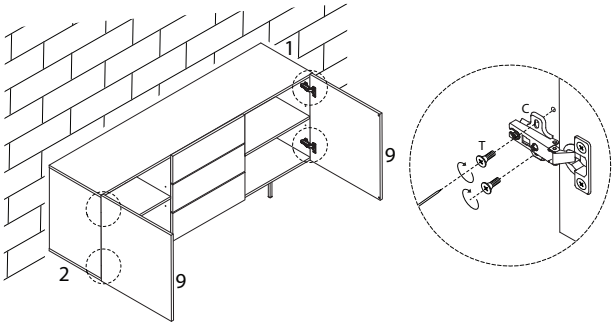
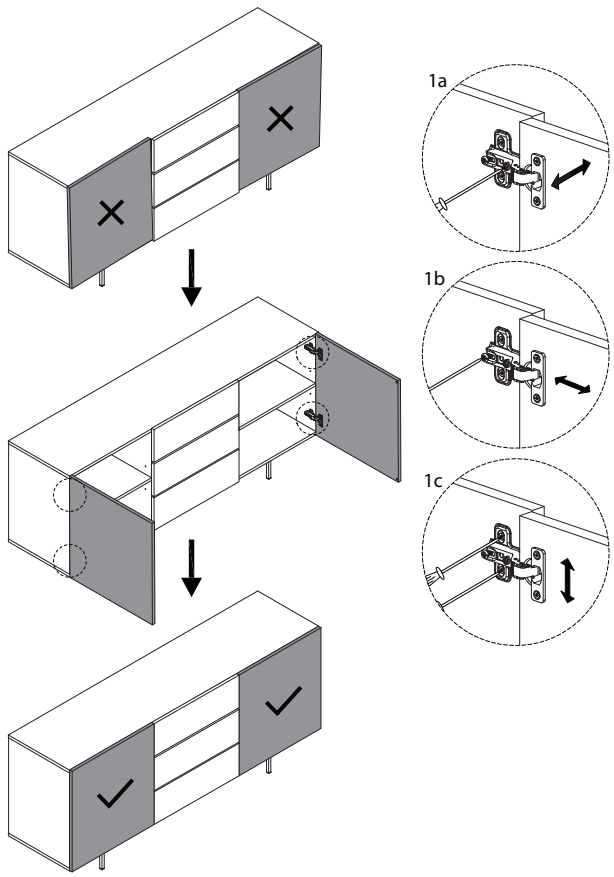
!