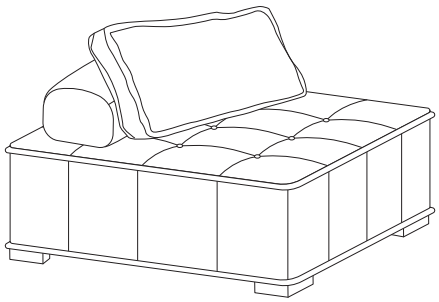

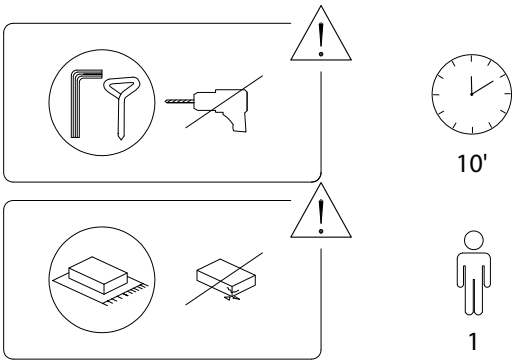


1/5

1082/TIBRO/110821/

| A | B | C | D | E |
|---|---|---|---|---|
|  |  |  |  | 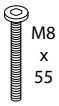 M8 x 55 |
| x 1 | x 1 | x 1 | x 4 | x 8 |

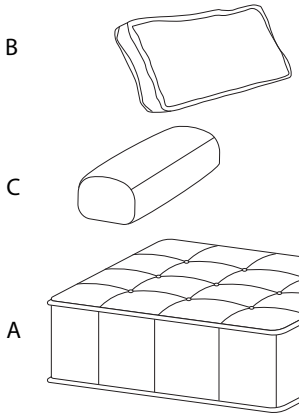


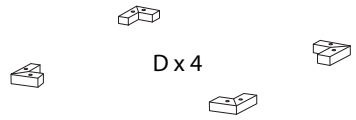


| F | G | H | I | J |
|---|---|---|---|---|
|  |  M4 x 30 |  |  |  |
| x 1 | x 10 | x 1 | x 8 | x 1 |

2/5

1082/TIBRO/110821/

## 1

| A |
|---|
|  |
| x 1 |

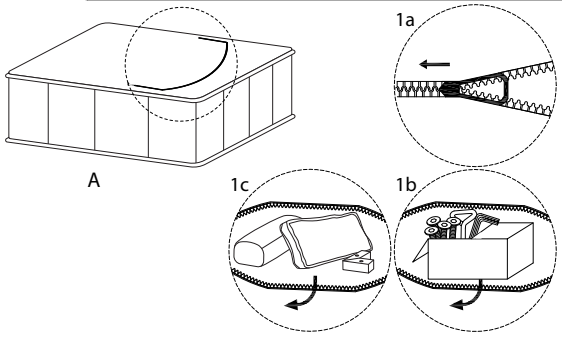


## !

| J |
|---|
|  |
| x 1 |

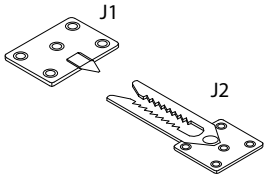


## 2

| D | E | F | I |
|---|---|---|---|
|  |  M8 x 55 |  |  |
| x 4 | x 8 | x 1 | x 8 |

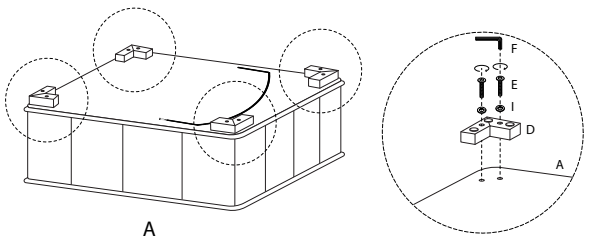


3/5

1082/TIBRO/110821/

## 3

| G | H | J1 | J2 |
|---|---|---|---|
|  M4 x 30 |  |  |  |
| x 10 | x 1 | x 1 | x 1 |

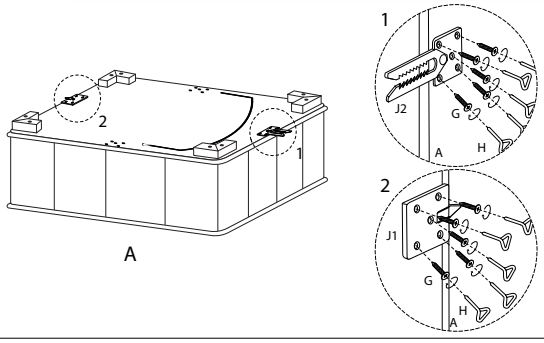


4/5

1082/TIBRO/110821/

4

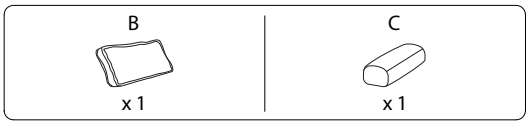


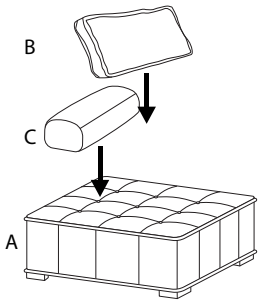


!

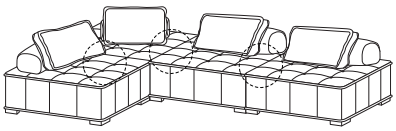

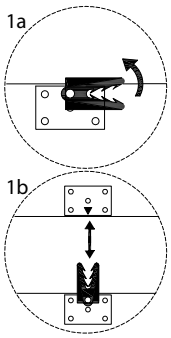




1082/TIBRO/110821/