ESRUM

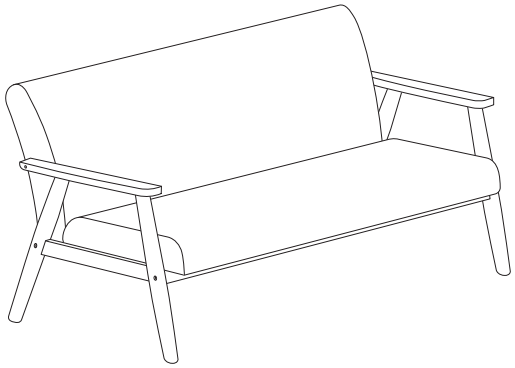

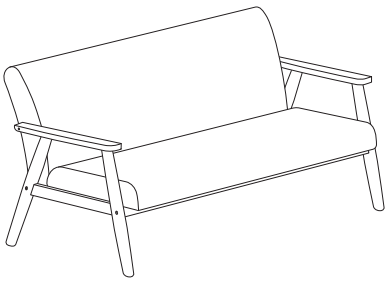

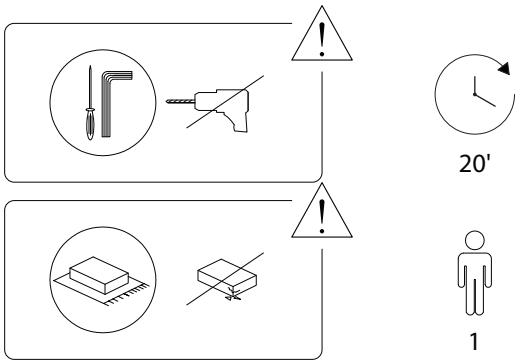

2242/ESRUM/171025/

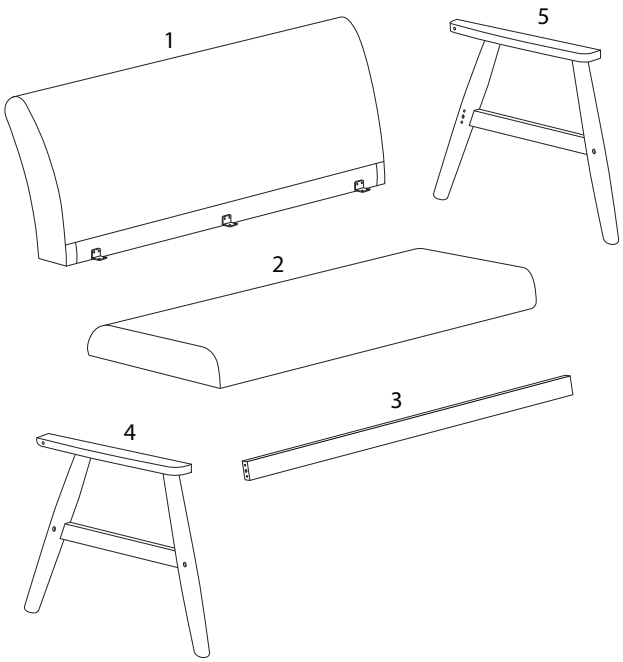

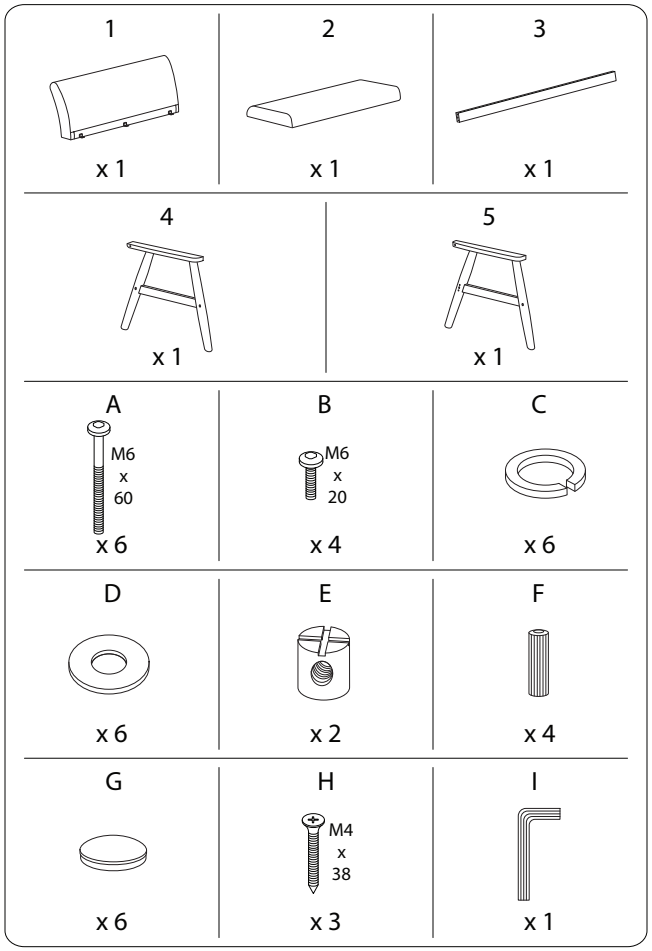

2242/ESRUM/171025/

2242/ESRUM/171025/

1

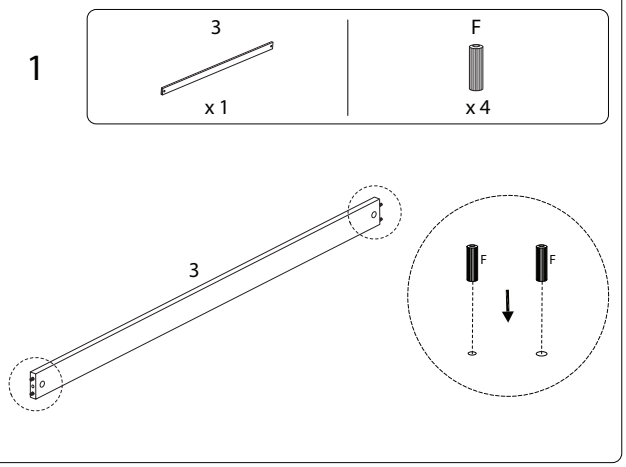
3
x 1
F
x 4
3
F
F

2

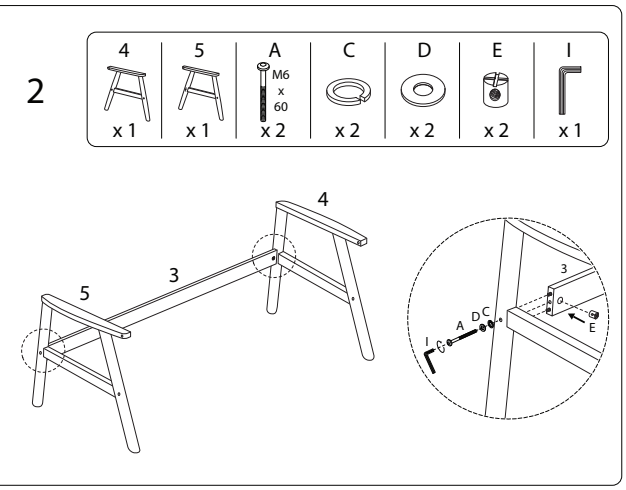
4
x 1
5
x 1
A
M6
x
60
x 2
C
x 2
D
x 2
E
x 2
I
x 1
4
3
5
3
A
D
C
E
I

3

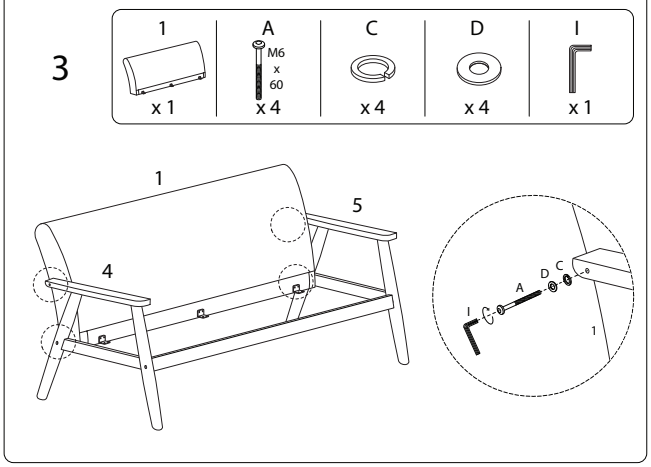
1
x 1
A
M6
x
60
x 4
C
x 4
D
x 4
I
x 1
1
5
4
D
C
A
I
1

4

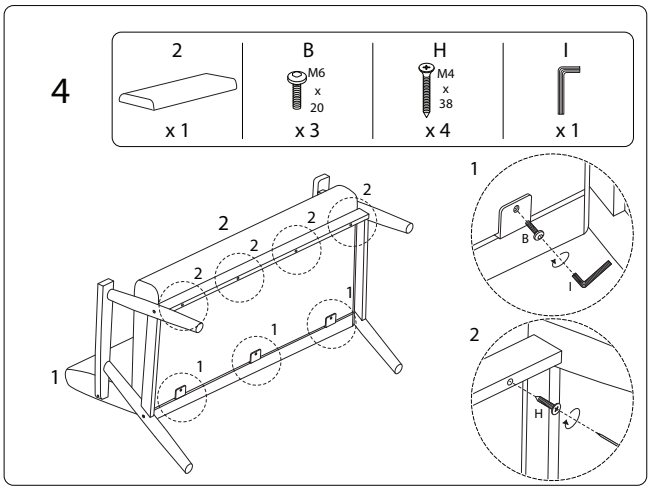
2
x 1
B
M6
x
20
x 3
H
M4
x
38
x 4
I
x 1
2
2
2
2
2
1
1
1
1
1
B
I
2
H

5

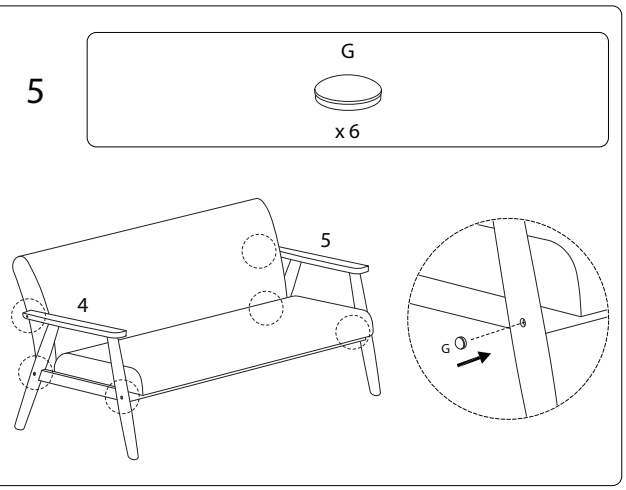
G
x 6
5
4
G