HELLNAR

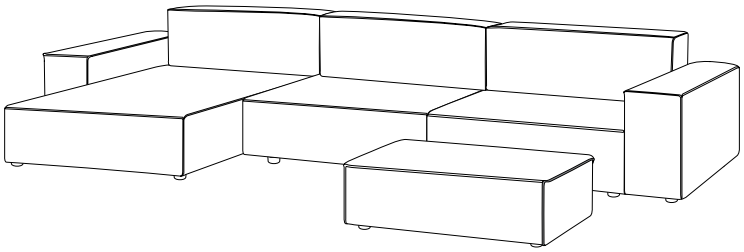

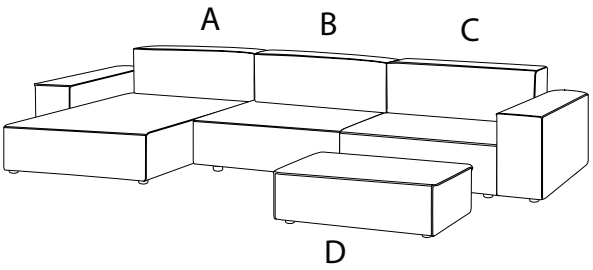
A
B
C
D

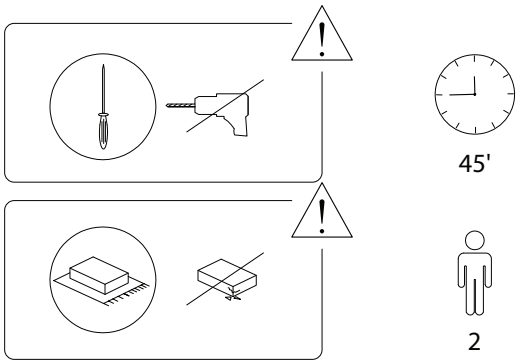
45'
2

A

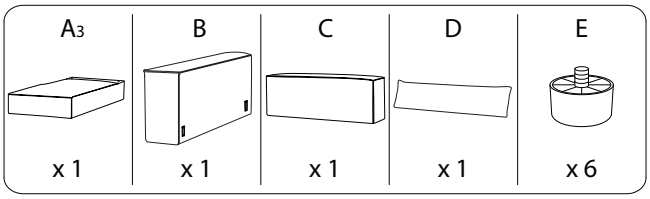
A3
B
C
D
E
x 1
x 1
x 1
x 1
x 6

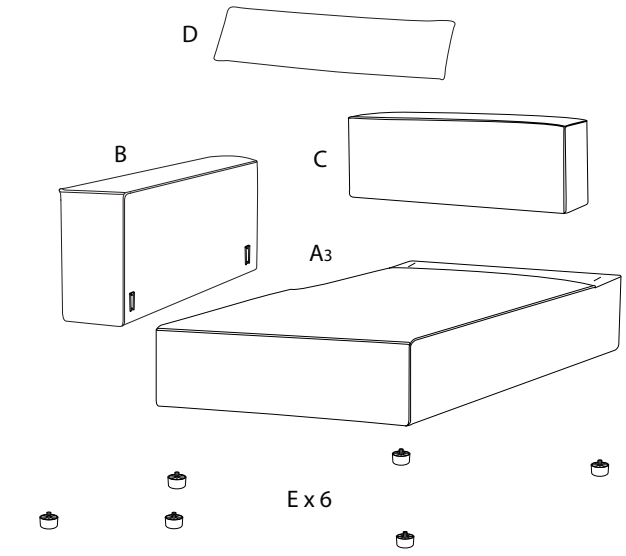
D
B
C
A3
E x 6

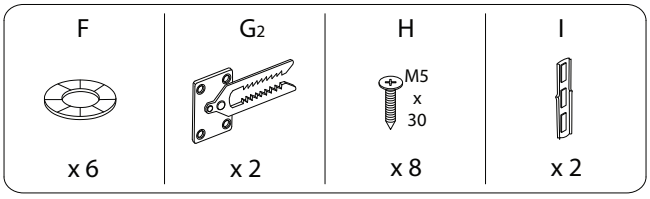
F
G2
H
I
M5
x
30
x 6
x 2
x 8
x 2

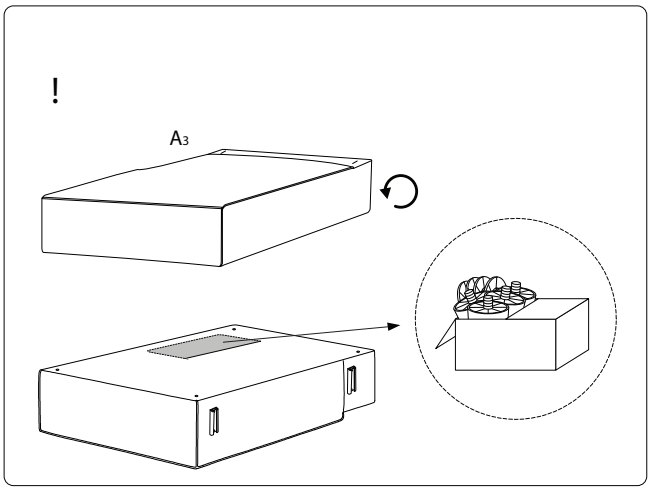
!
A3

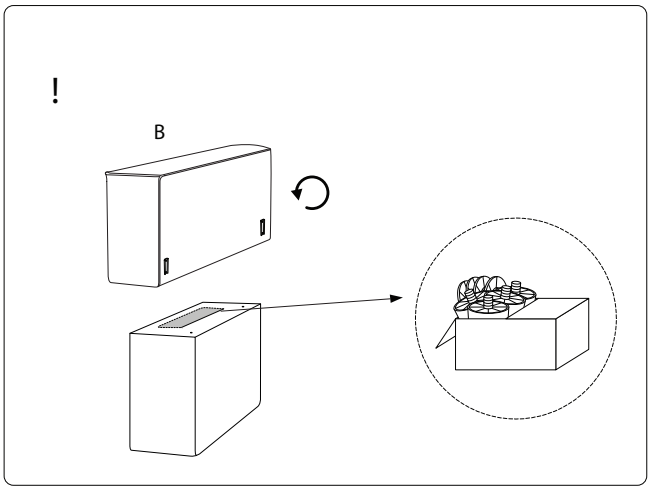
!
B

1

A_3	E	F
x 1	x 4	x 4

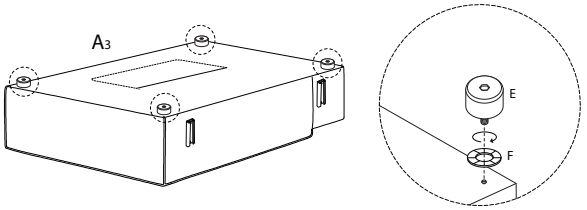

2

B	E	F
x 1	x 2	x 2

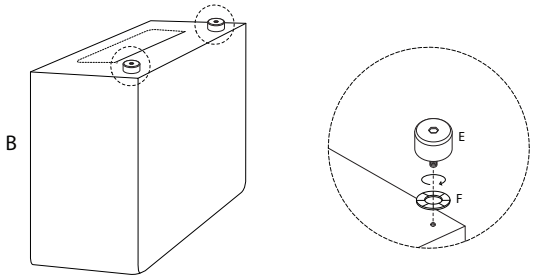

1129/HELLNAR/220424/

3

G_2	H
x 2	x 8

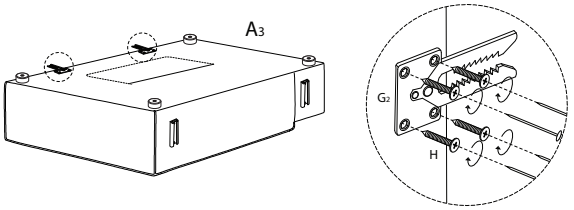

4

C	I
x 1	x 2

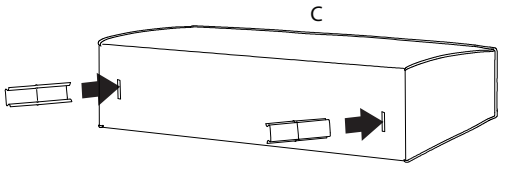

1129/HELLNAR/220424/

5

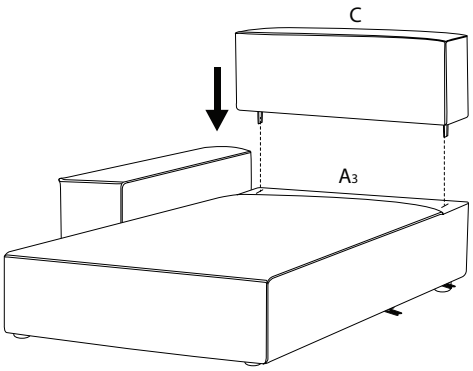

6

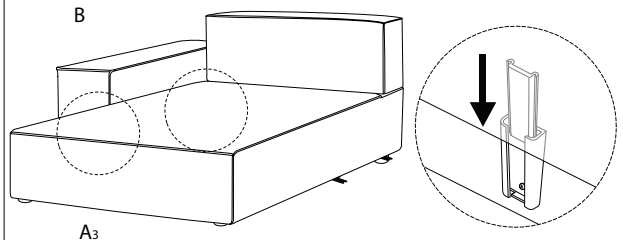

1129/HELLNAR/220424/

7

D
x 1

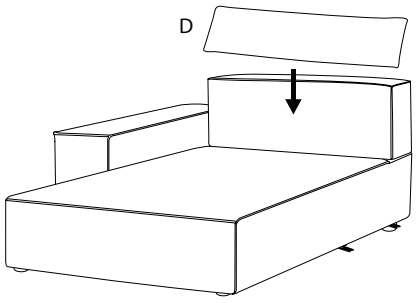

1129/HELLNAR/220424/

B

A2	C	D	E
x 1	x 1	x 1	x 4

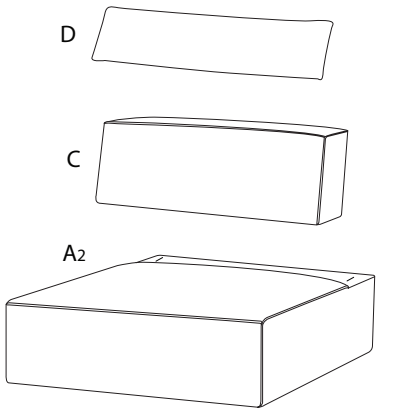

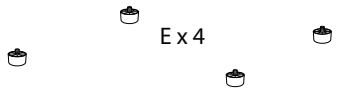

F	G1	G2	H	I
x 4	x 2	x 2	M5 x 30 x 18	x 2

1129/HELLNAR/220424/

!

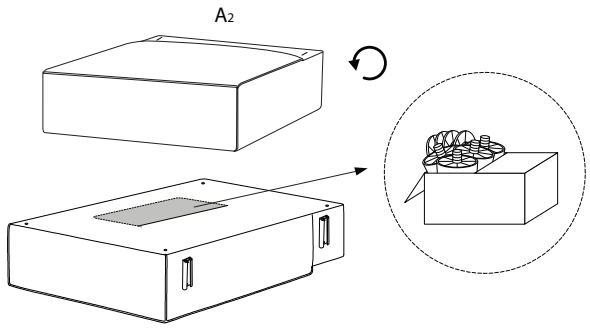

1

A2	E	F
x 1	x 4	x 4

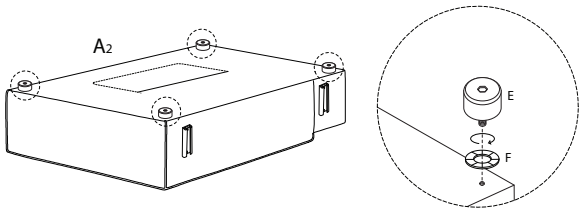

1129/HELLNAR/220424/

2

G1	G2	H
x 2	x 2	M5 x 30 x 18

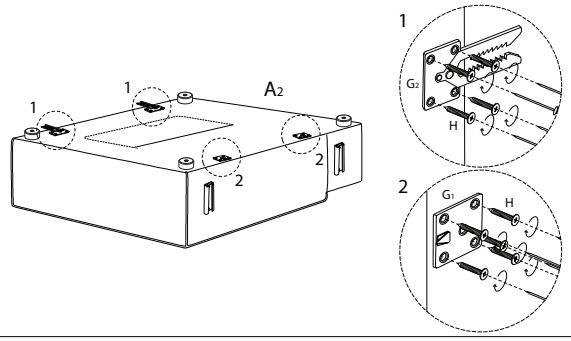

4

C	I
x 1	x 2

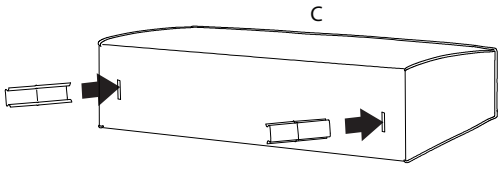

3

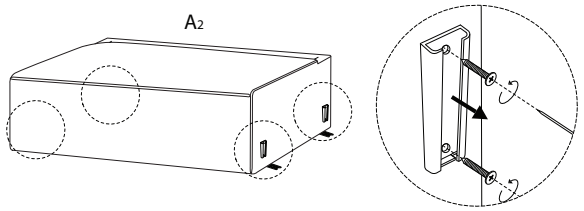

1129/HELLNAR/220424/

5

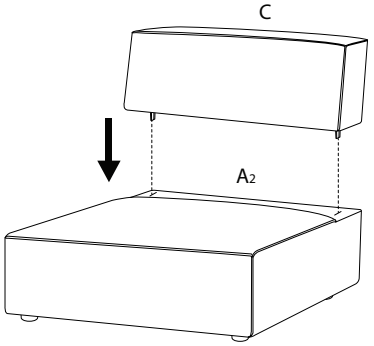

1129/HELLNAR/220424/

6

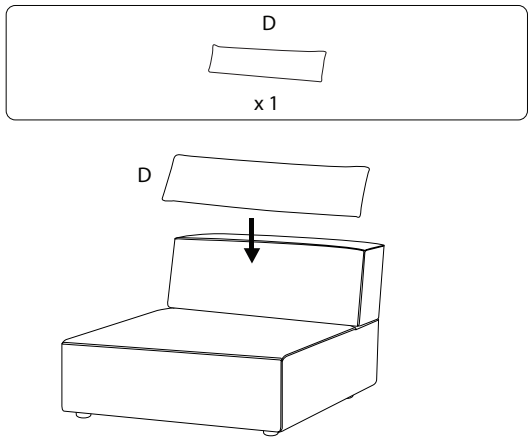
D
x 1
D

C

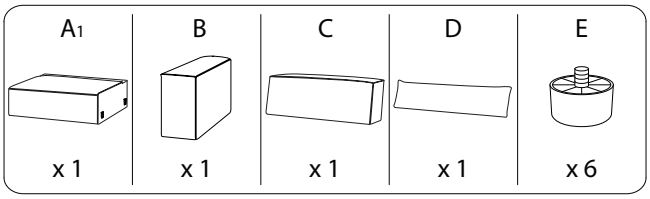
A1
B
C
D
E
x 1
x 1
x 1
x 1
x 6

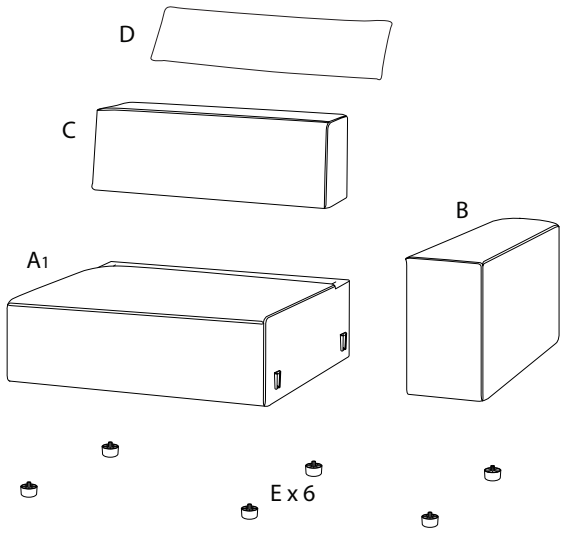
D
C
B
A1
E x 6

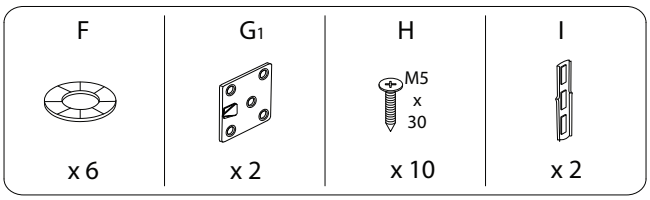
F
G1
H
I
M5
x
30
x 6
x 2
x 10
x 2

!

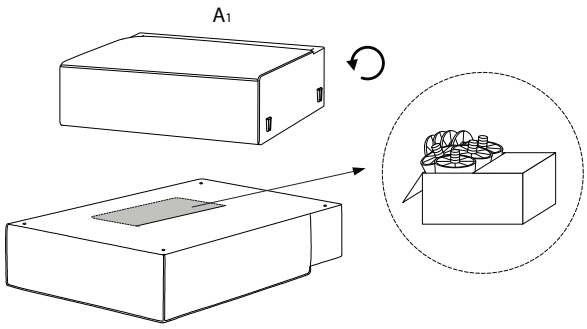
A1

1

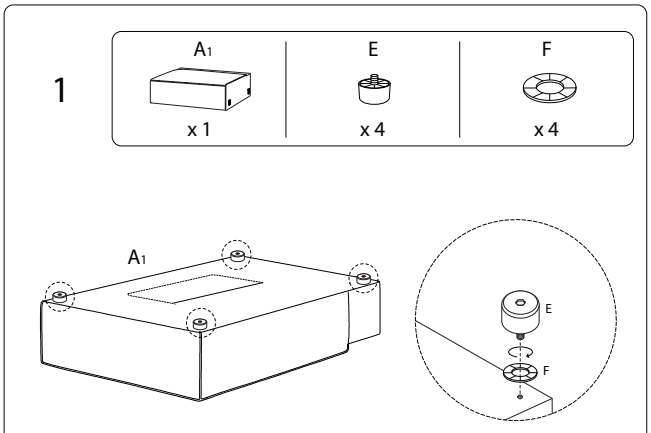
A1
E
F
x 1
x 4
x 4
A1
E
F

!

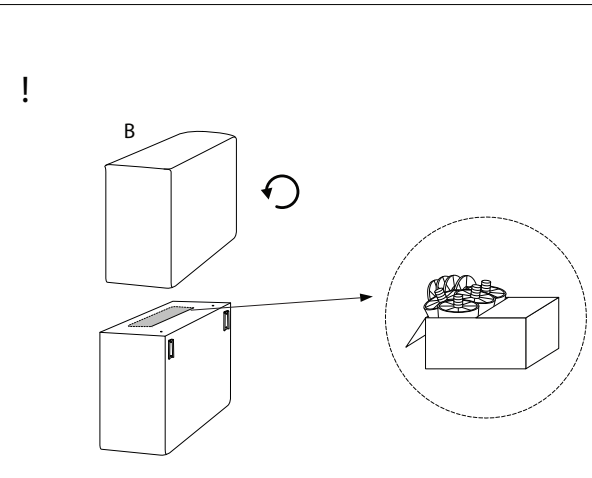
B

2

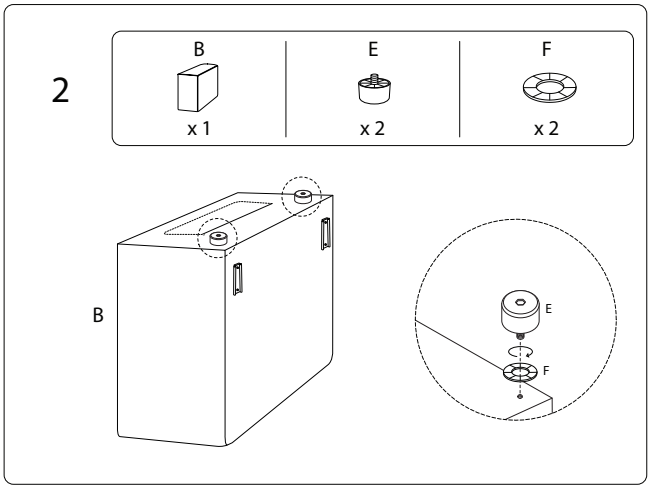
B
E
F
x 1
x 2
x 2
B
E
F

3

G1	H
x 2	x 10

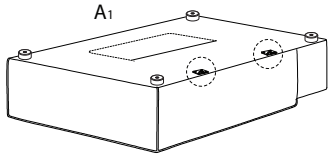

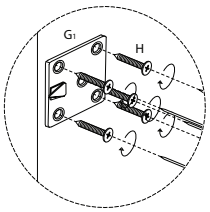

4

C	I
x 1	x 2

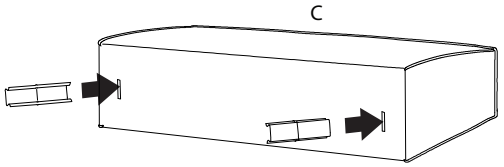

5

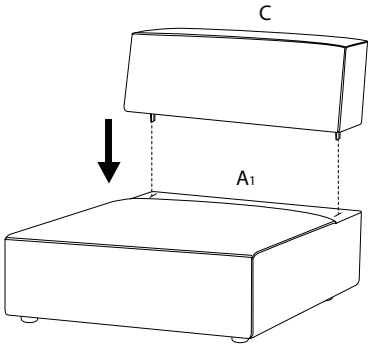

6

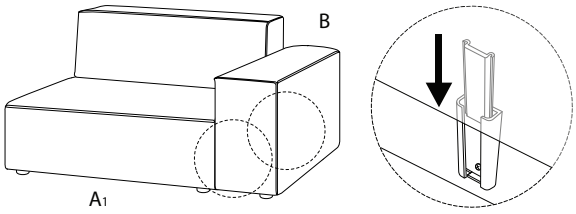

D

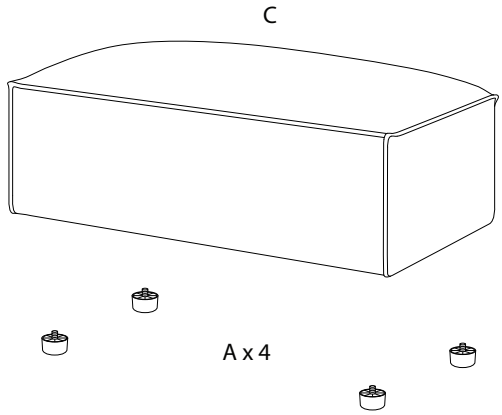

A	B	C
x 4	x 4	x 1

!

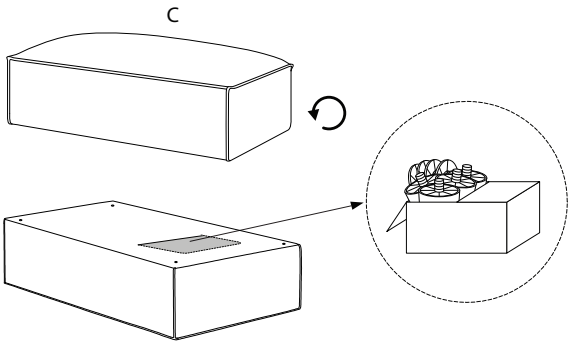

1

A	B	C
x 4	x 4	x 1

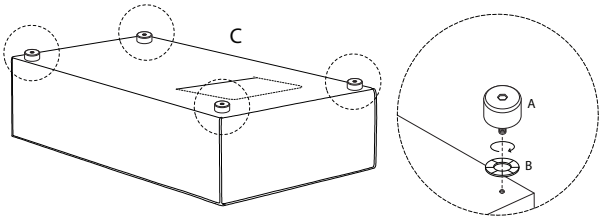

!

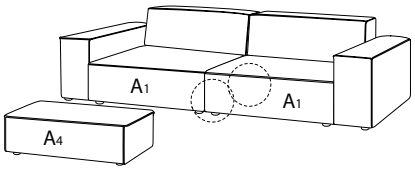

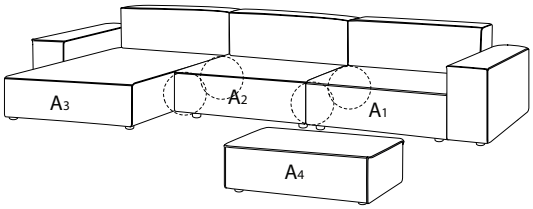

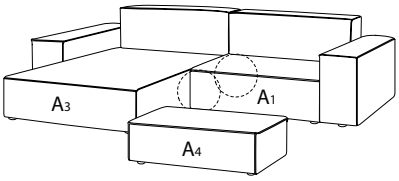

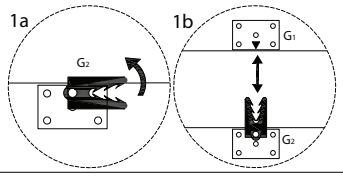

1129/HELLNAR/220424/