MARUM

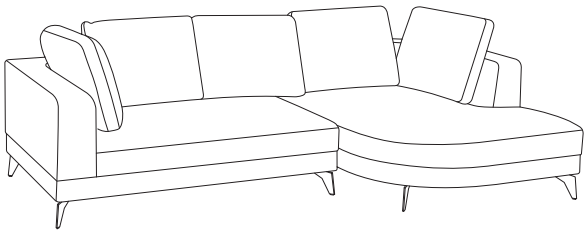

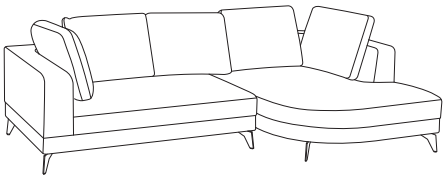

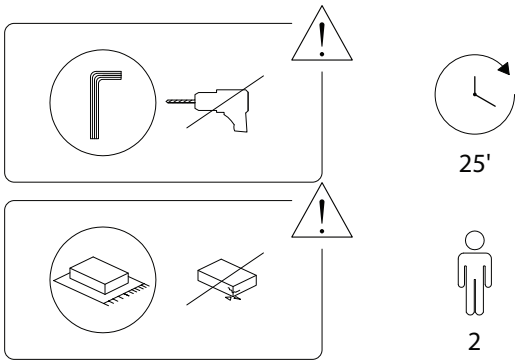

1/5

2339/MARUM-left/241125/

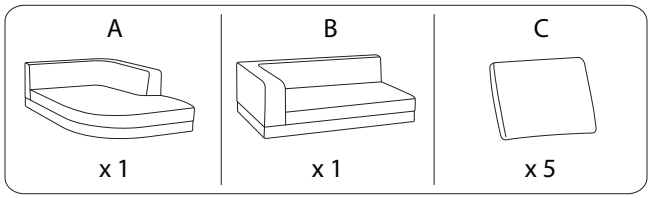

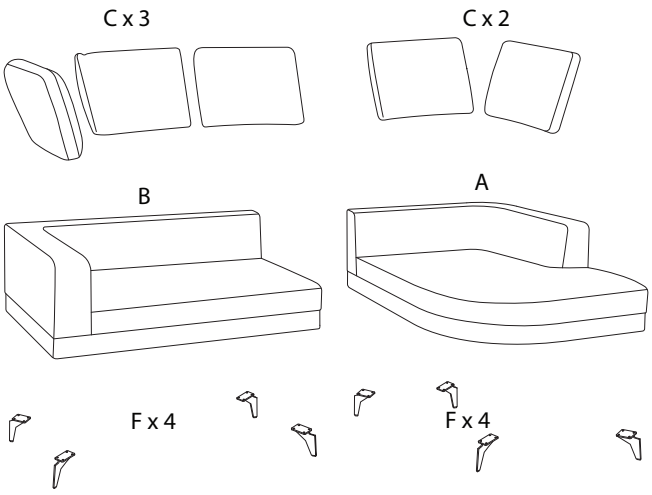

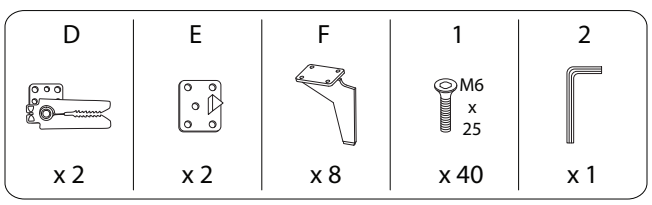

2/5

2339/MARUM-left/241125/

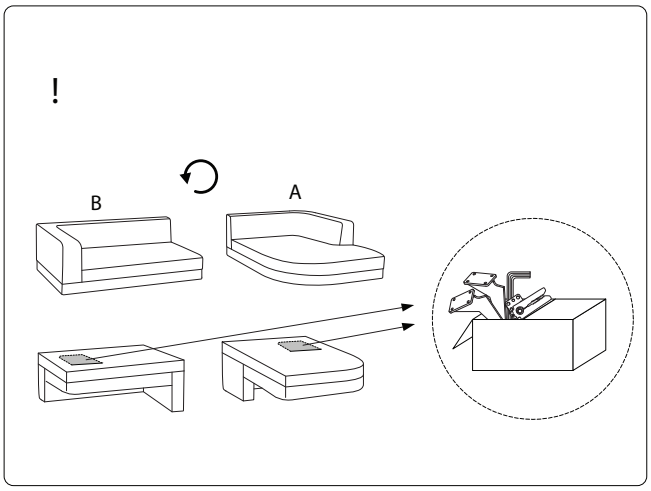

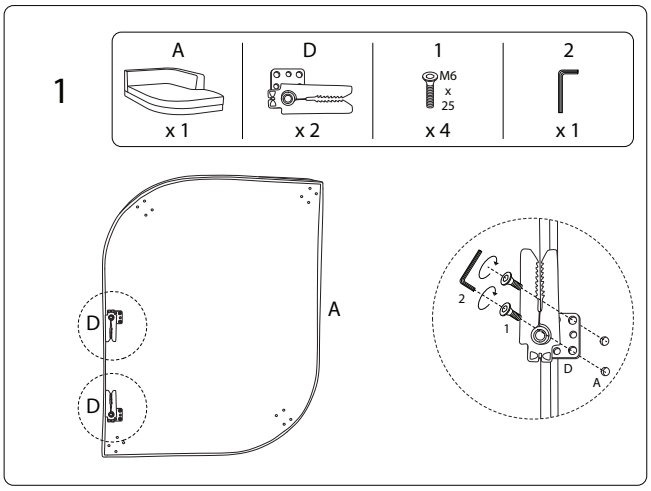

3/5

2339/MARUM-left/241125/

2

B	E	1	2
x 1	x 2	x 4	x 1

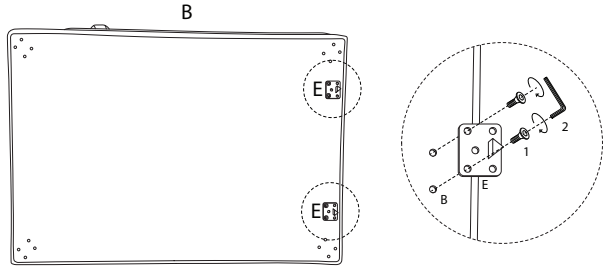

3

F	1	2
x 8	x 32	x 1

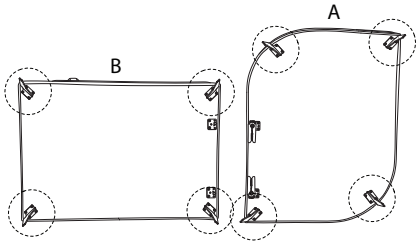

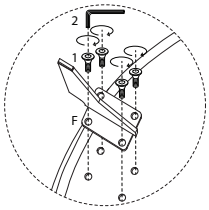

2339/MARUM-left/241125/

4

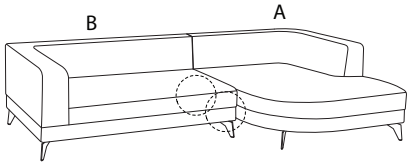

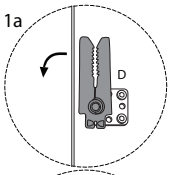

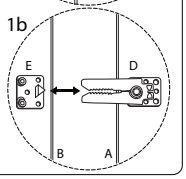

5

C
x 5

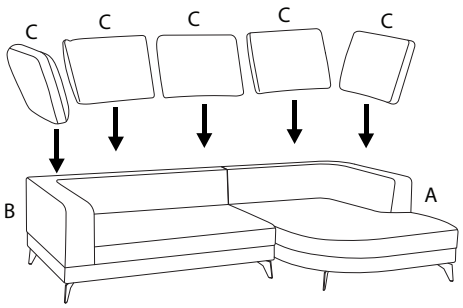

2339/MARUM-left/241125/