HEM

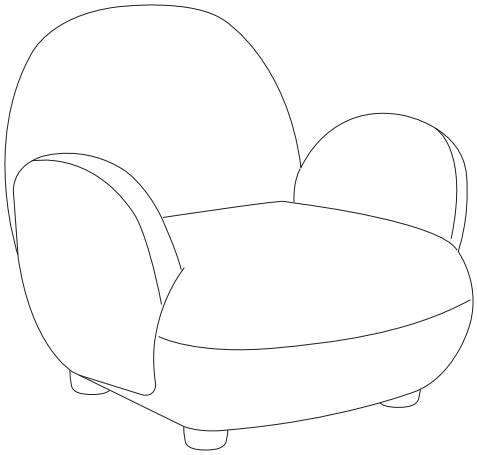

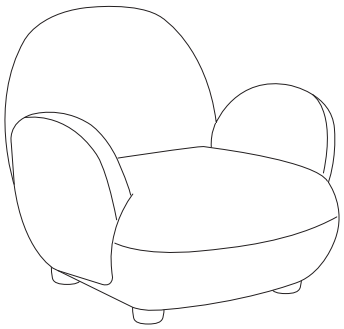

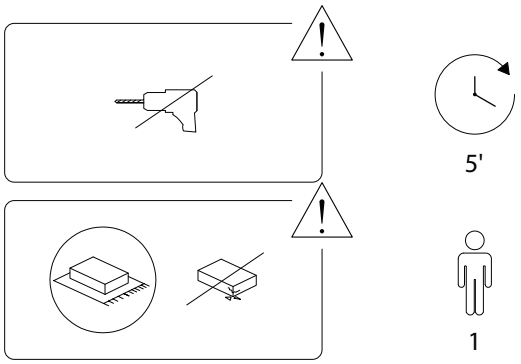

1/3

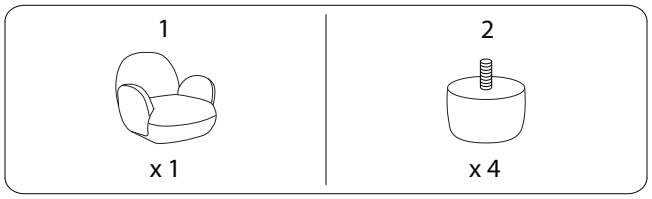

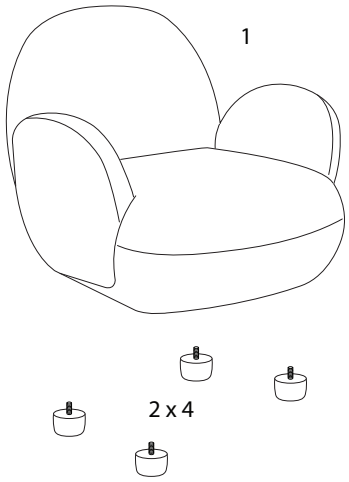

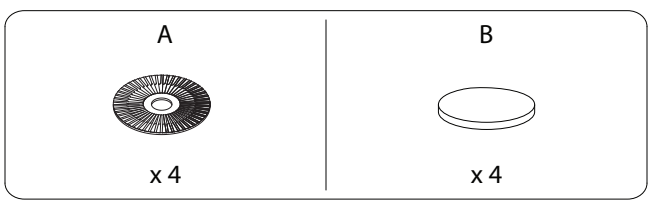

2/3

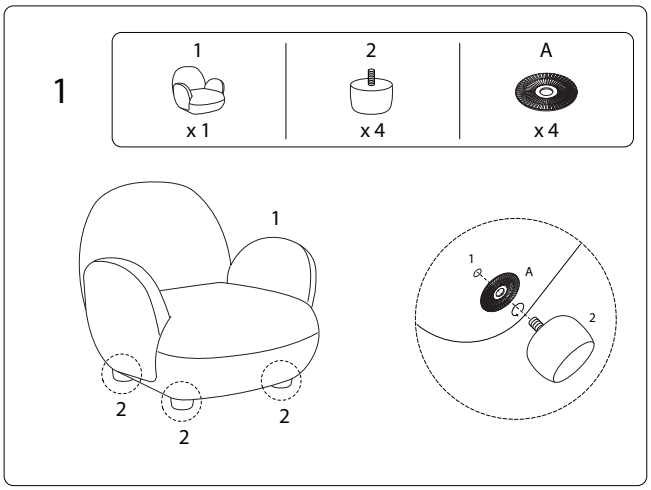

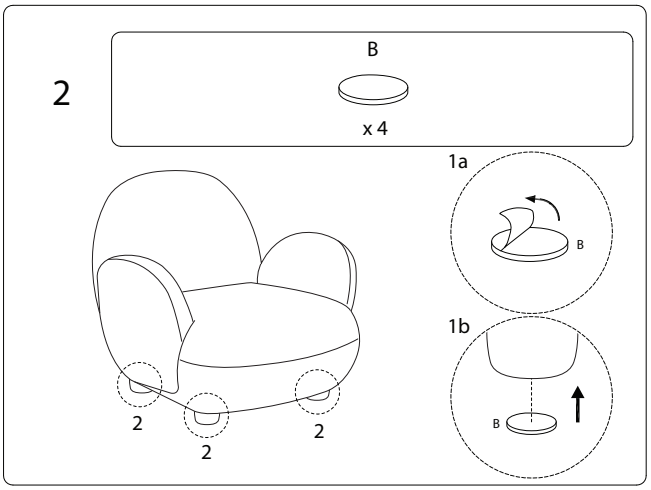

3/3

2100/HEM/280525/