LUGO

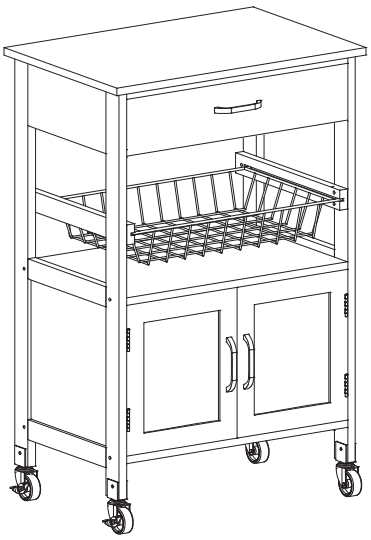

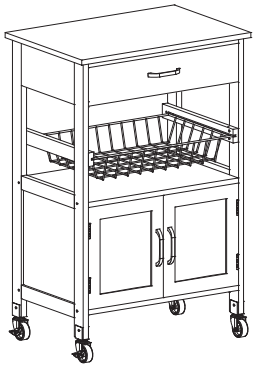

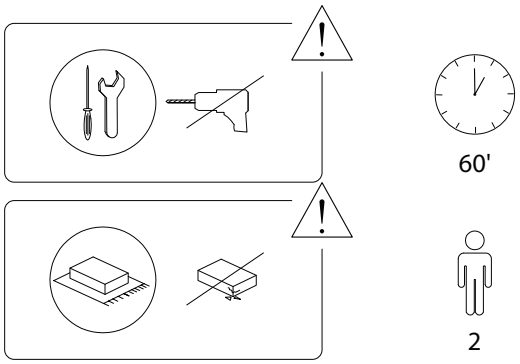

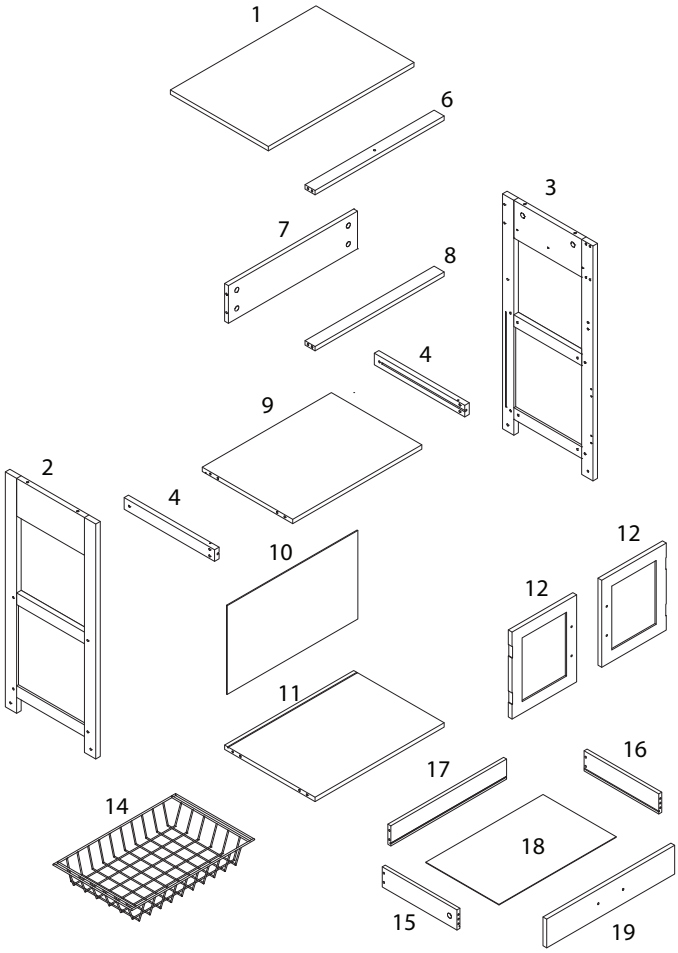

1 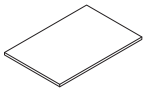 x 1	2 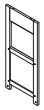 x 1	3 x 1	4 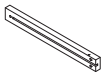 x 4
6 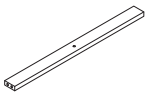 x 1	7 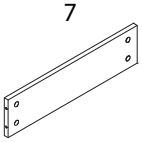 x 1	8 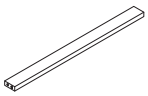 x 1	9 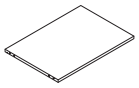 x 1
10 x 1	11 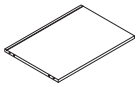 x 1	12 x 2	14 x 1
15 x 1	16 x 1	17 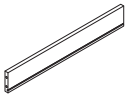 x 1	18 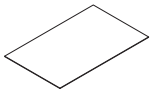 x 1
19 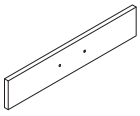 x 1			

A x 14	B x 14	C x 16
D M3 x 12 x 28	E M4 x 35 x 4	F M6 x 50 x 8
G x 8	H x 1	I M3 x 14 x 6
J x 2	K x 2	L M6 x 30 x 4
M x 4	N x 4	O x 2

P M4 x 25 x 7	Q x 3	R M4 x 16 x 6
S M3 x 18 x 2	T x 4	U x 4
V x 4	W x 1	YR x 1
YL x 1	ZR x 1	ZL x 1

1

2	3	4	P
x 1	x 1	x 2	M4 x 25 x 6

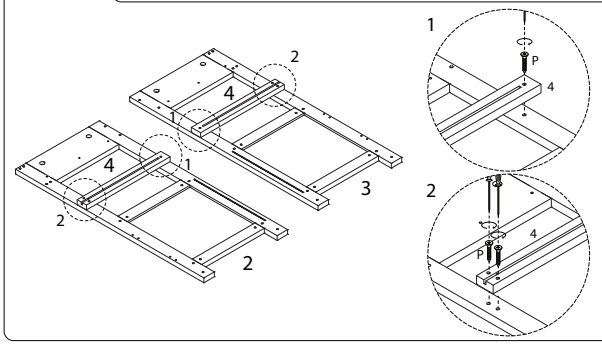

3

A
x 8

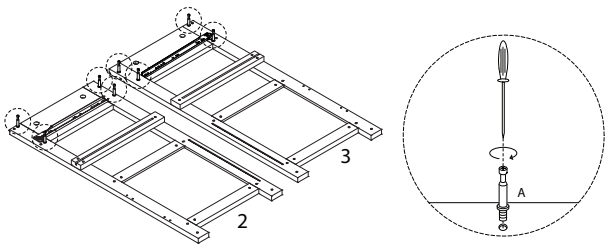

2

D	YR	YL
M3 x 12 x 6	x 1	x 1

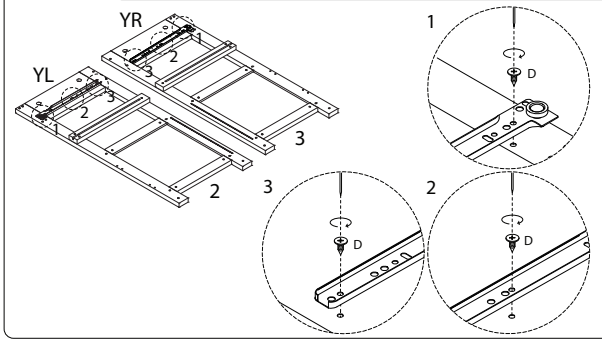

4

9	H	I
x 1	x 1	M3 x 14 x 2

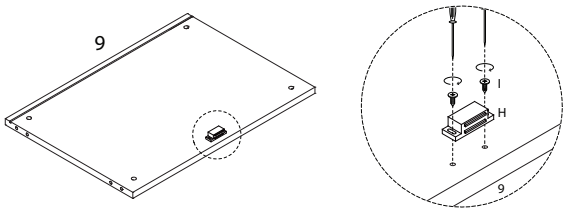

5

C
x 4

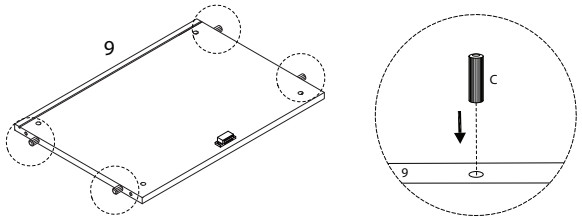

6

F	G
M6 x 50	
x 2	x 2

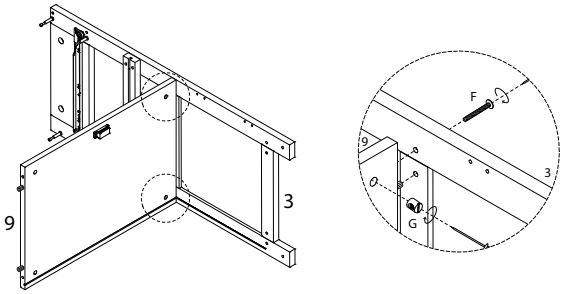

7

11	C
x 1	x 4

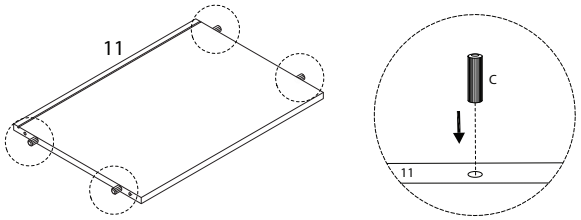

8

F	G
M6 x 50	
x 2	x 2

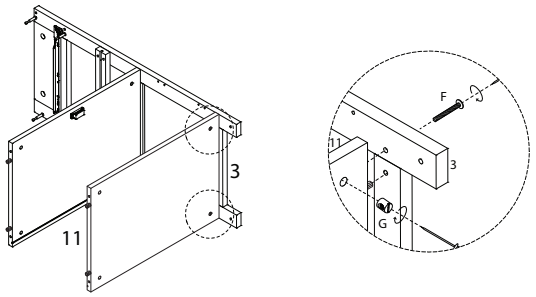

9

J	K	L	M	T	U	W
		M6 x 30				
x 1	x 1	x 2	x 2	x 2	x 2	x 1

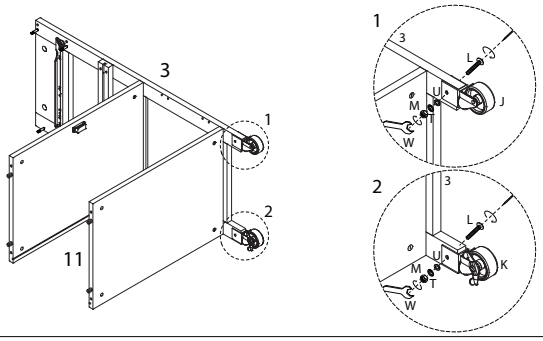

11

10
x 1

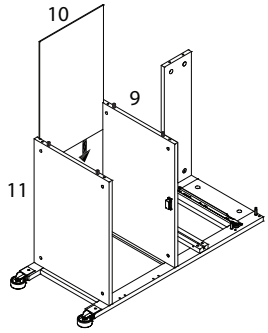

10

7	B
x 1	x 2

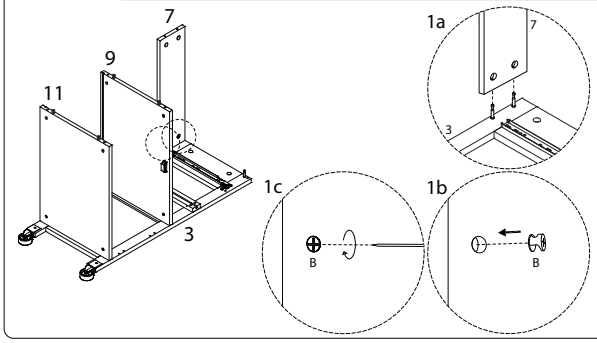

12

6	8	C
x 1	x 1	x 4

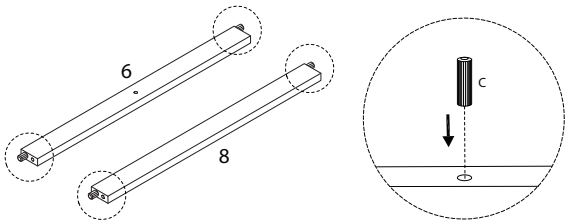

13

B
x 2

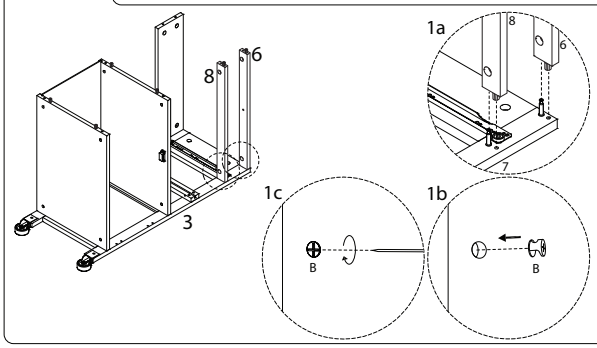

14

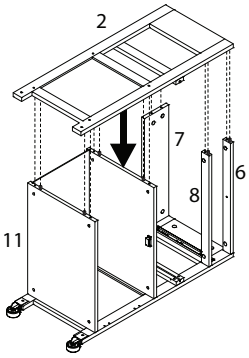

15

F	G
M6 x 50	
x 4	x 4

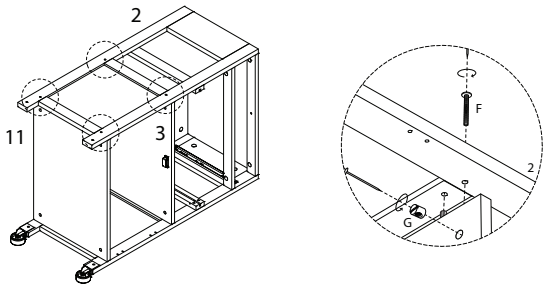

16

B
x 4

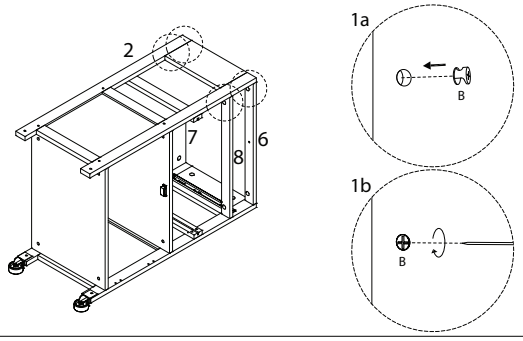

17

J	K	L	M	T	U	W
		M6 x 30				
x 1	x 1	x 2	x 2	x 2	x 2	x 1

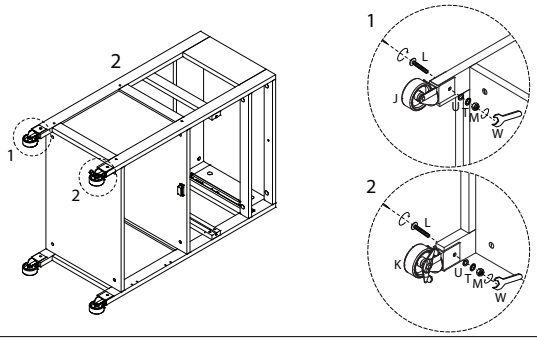

18

1	A
x 1	x 4

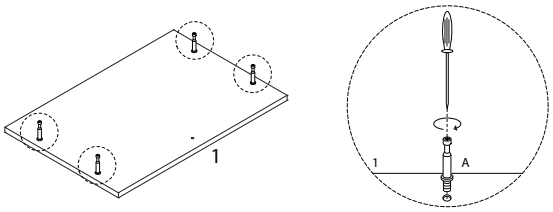

19

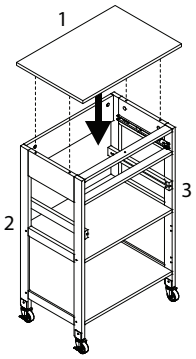

20

P
M4 x 25
x 1

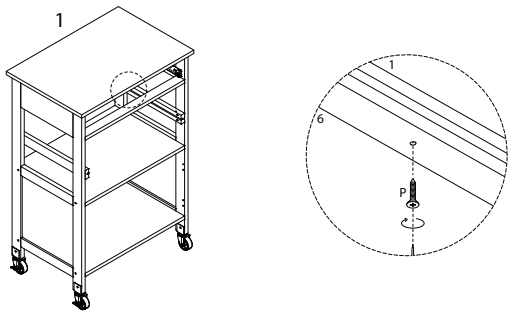

21

B
x 4

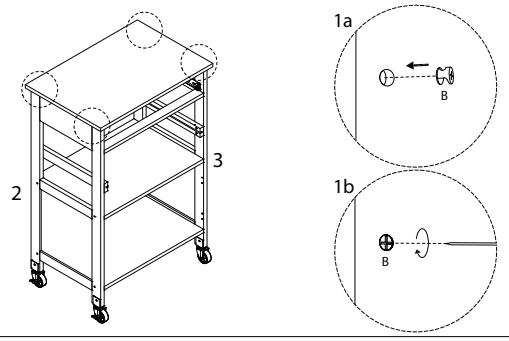

22 x 2

12	D	N	O
x 1	M3 x 12 x 5	x 2	x 1

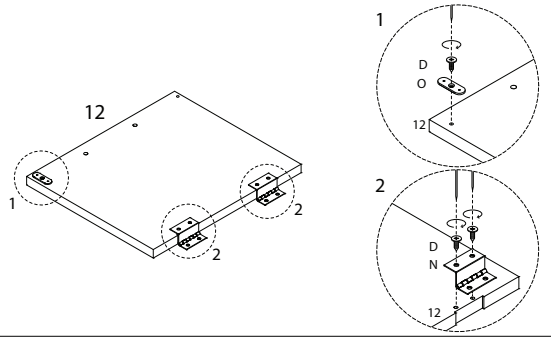

23

D
M3 x 12
x 8

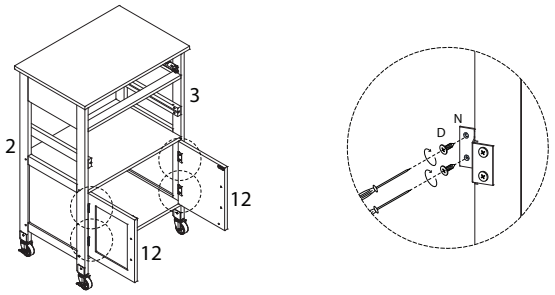

24

Q	R
x 2	M4 x 16 x 4

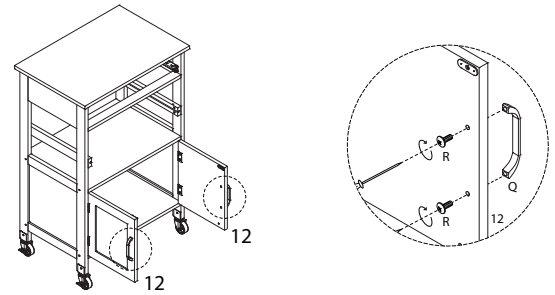

25

19	A	C
x 1	x 2	x 4

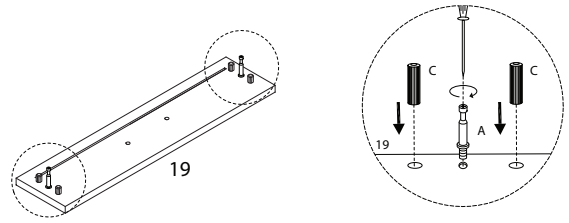

26

15	16	B
x 1	x 1	x 2

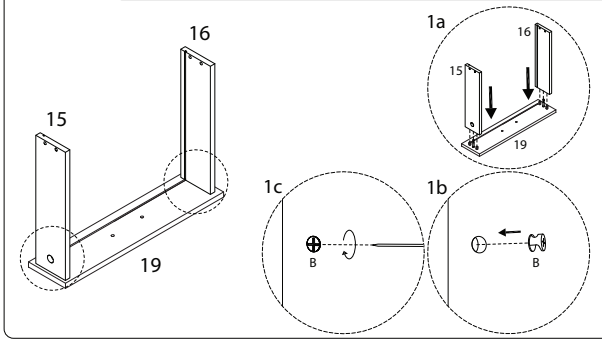

27

18
x 1

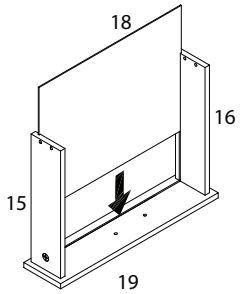

28

17	E
x 1	M4 x 35 x 4

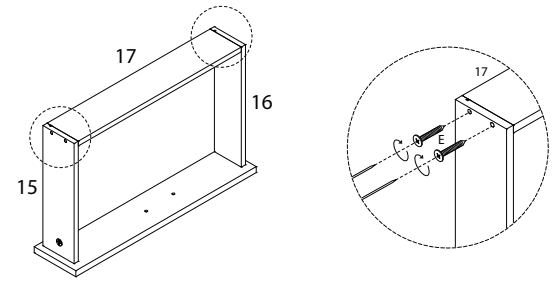

29

D	ZR	ZL
M3 x 12		
x 4	x 1	x 1

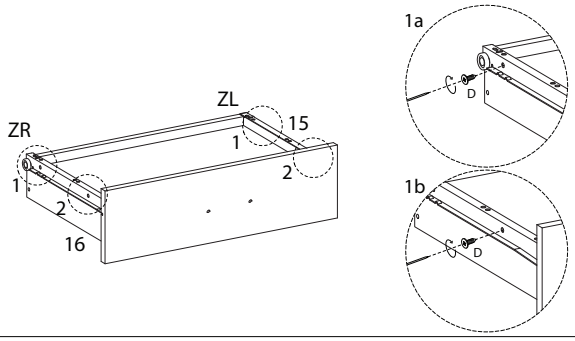

30

Q	R
	M4 x 16
x 1	x 2

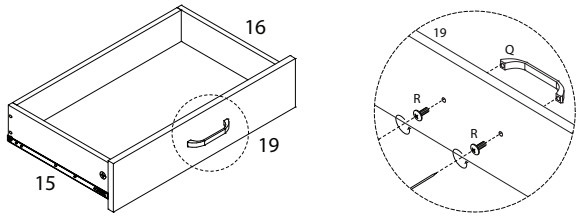

31

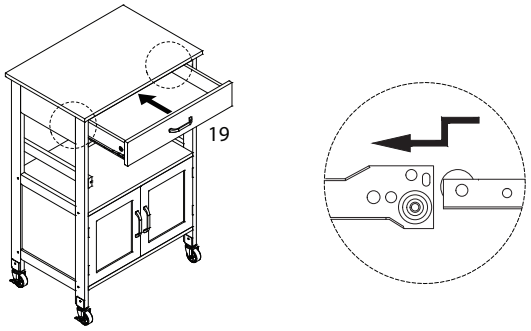

32

I	V
M3 x 14	
x 4	x 4

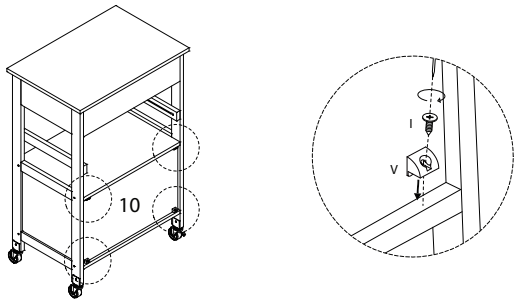

33

14
x 1

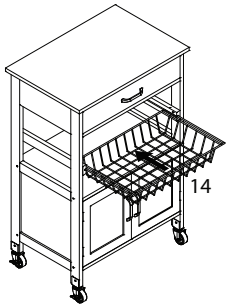

34
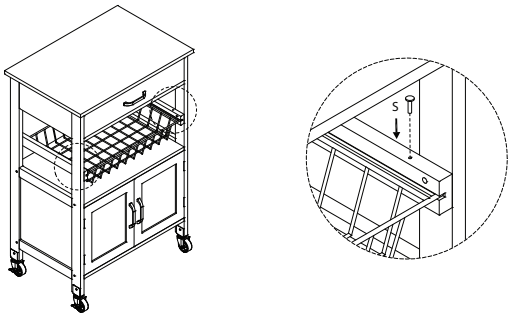
S
M3 x 18
x 2