NUKARI

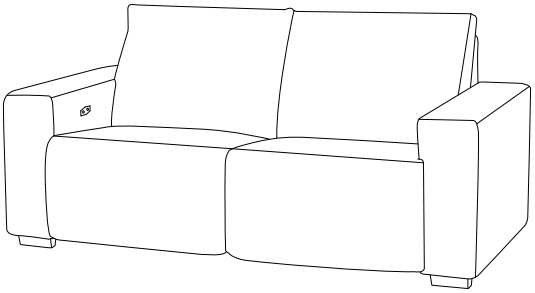

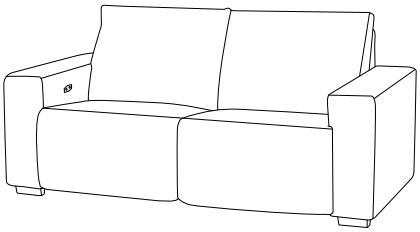

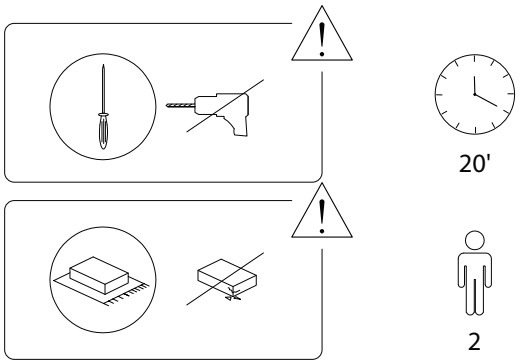

1/5

2117/NUKARI/050624/

A1	A2	B	C
x 1	x 1	x 4	x 4

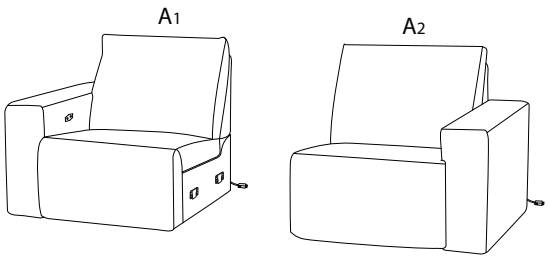

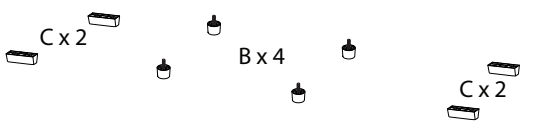

D	E	F	G
x 1	x 1	M5 x 50 x 8	x 1

2/5

2117/NUKARI/050624/

1

A1	A2	B	C	F
x 1	x 1	x 4	x 4	M5 x 50 x 8

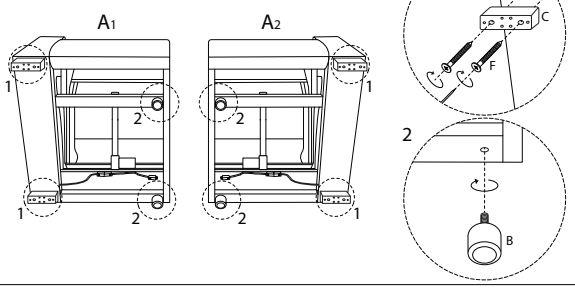

2

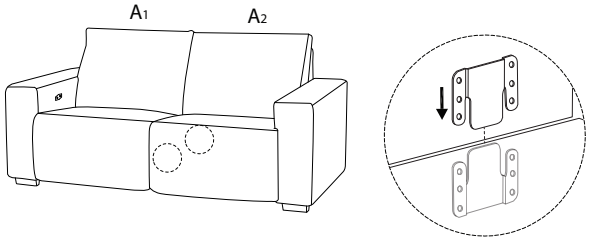

3/5

2117/NUKARI/050624/

3

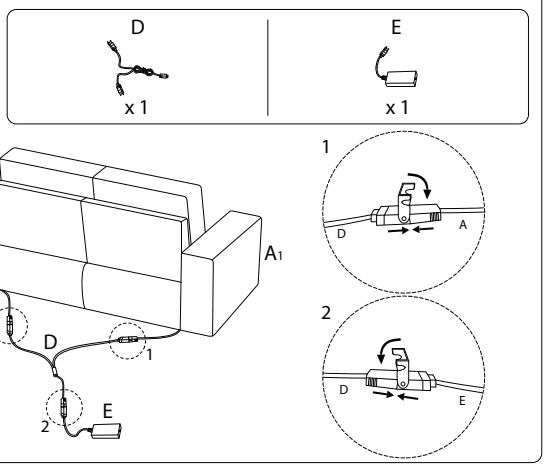

4

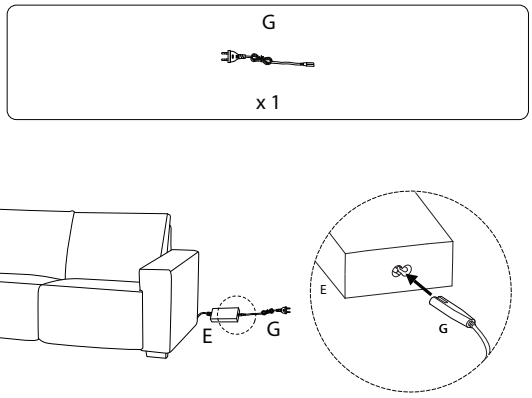

2117/NUKARI/050624/

!

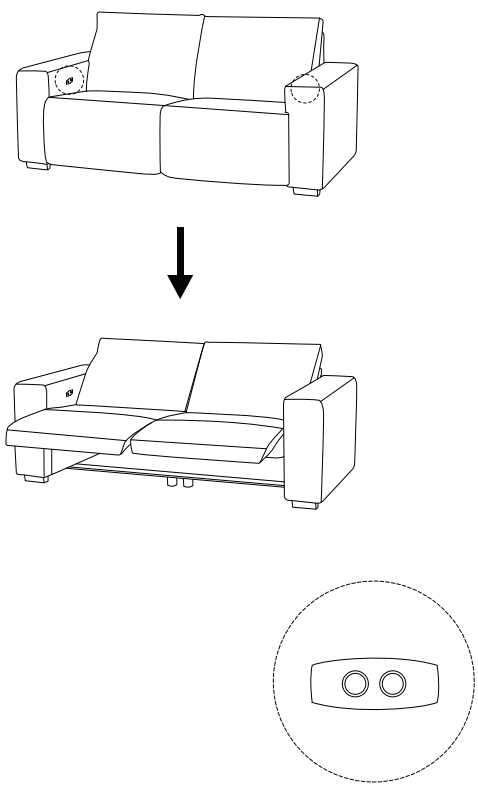

2117/NUKARI/050624/