LANCELIN

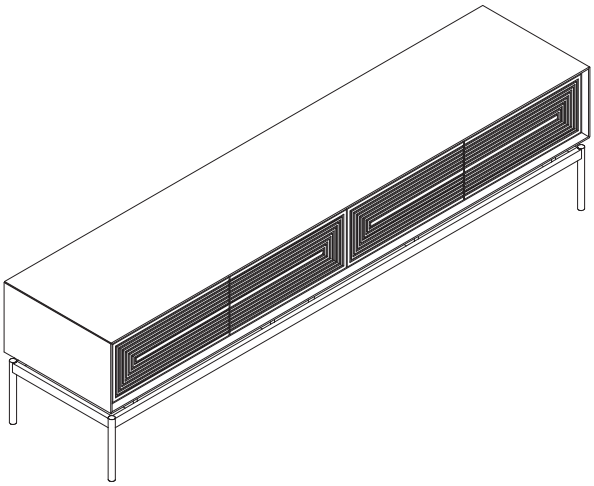

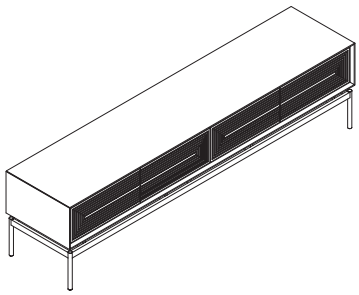

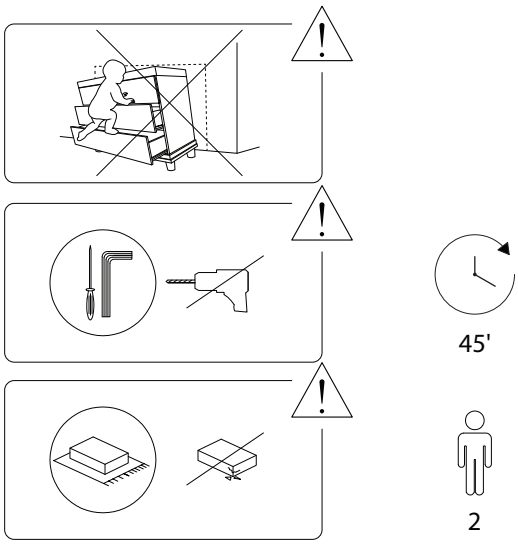
45'
2

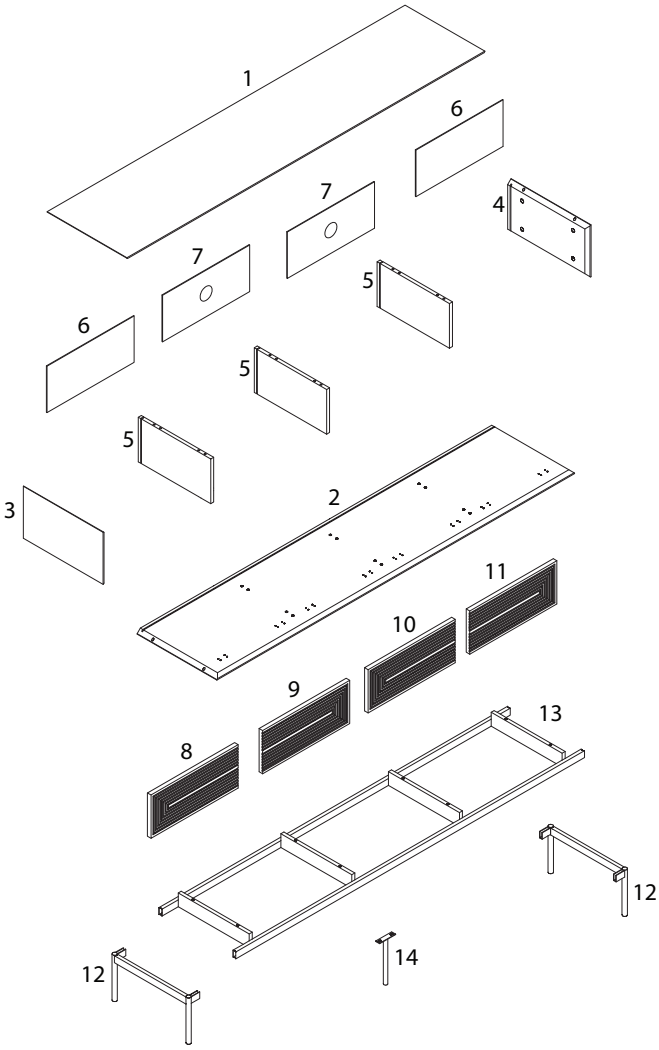
1
6
7
4
7
5
6
5
5
3
2
11
10
9
13
8
12
14
12

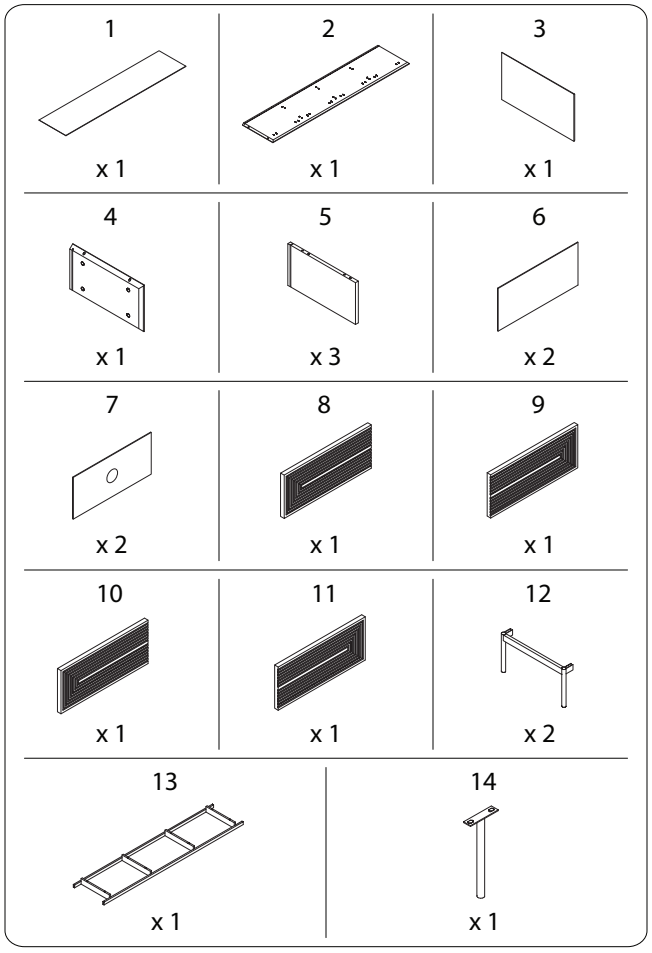
1
x 1
2
x 1
3
x 1
4
x 1
5
x 3
6
x 2
7
x 2
8
x 1
9
x 1
10
x 1
11
x 1
12
x 2
13
x 1
14
x 1

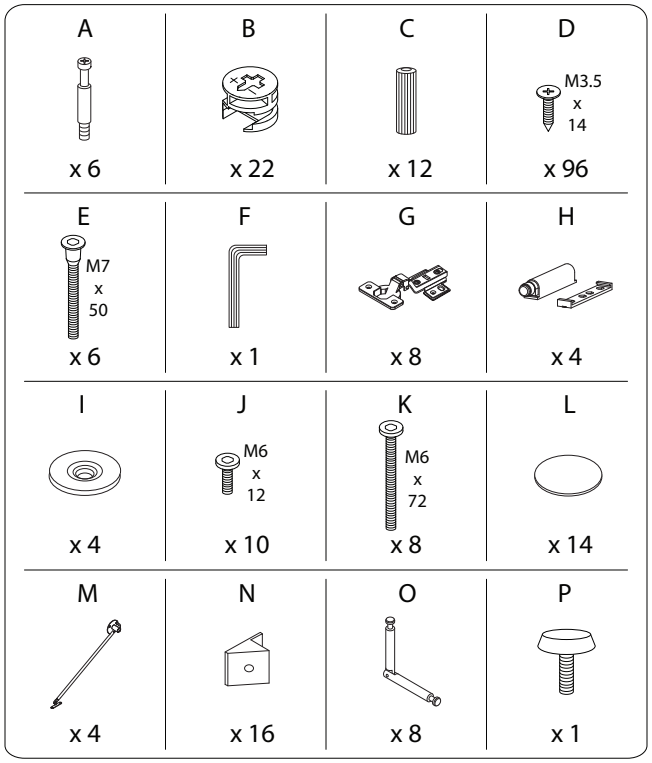
A
x 6
B
x 22
C
x 12
D
M3.5 x 14
x 96
E
M7 x 50
x 6
F
x 1
G
x 8
H
x 4
I
x 4
J
M6 x 12
x 10
K
M6 x 72
x 8
L
x 14
M
x 4
N
x 16
O
x 8
P
x 1

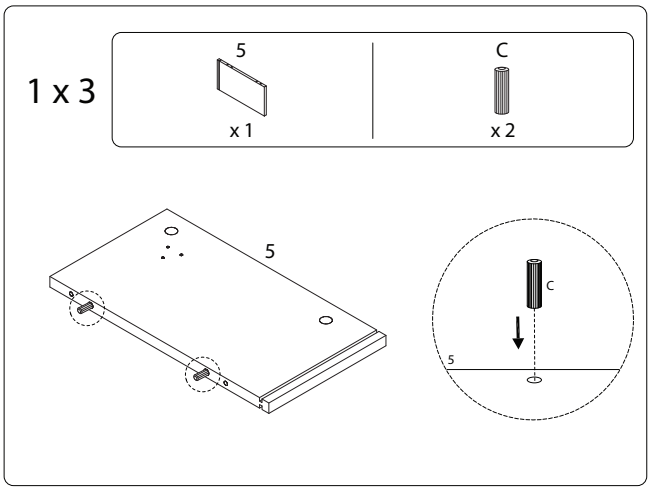
1 x 3
5
x 1
C
x 2
5
C
5

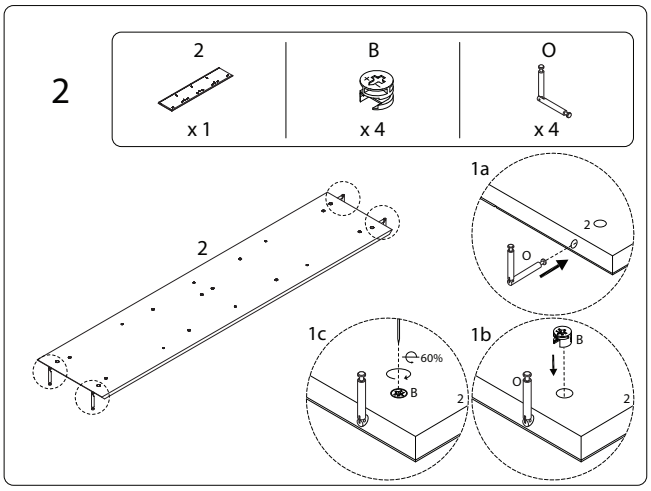
2
2
x 1
B
x 4
O
x 4
2
1a
2
O
1c
60%
B
2
1b
B
O
2

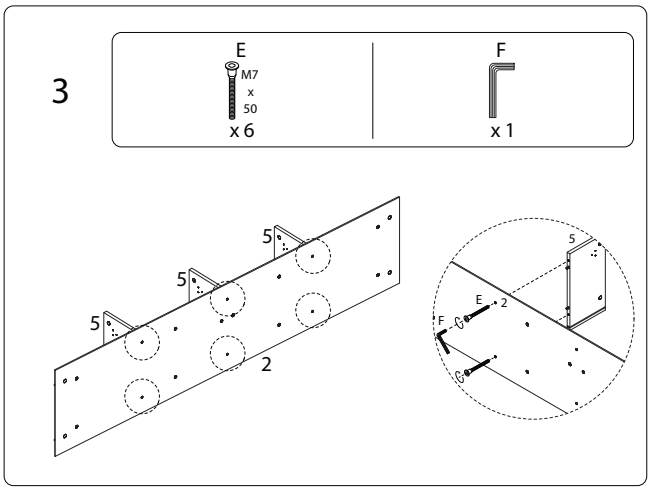
3
E
M7 x 50
x 6
F
x 1
5
5
5
2
5
E
2
F

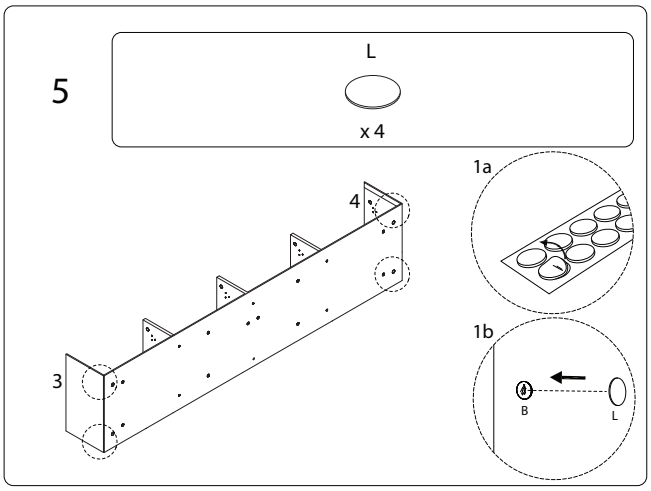
5
L
x 4
4
3
1a
1b
B
L

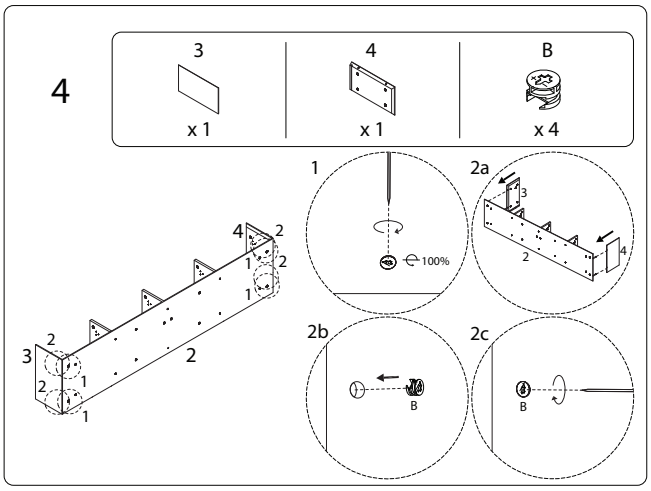
4
3
x 1
4
x 1
B
x 4
4
2
1
2
1
3
2
2
1
2
1
1
100%
2a
3
2
4
2b
B
2c
B

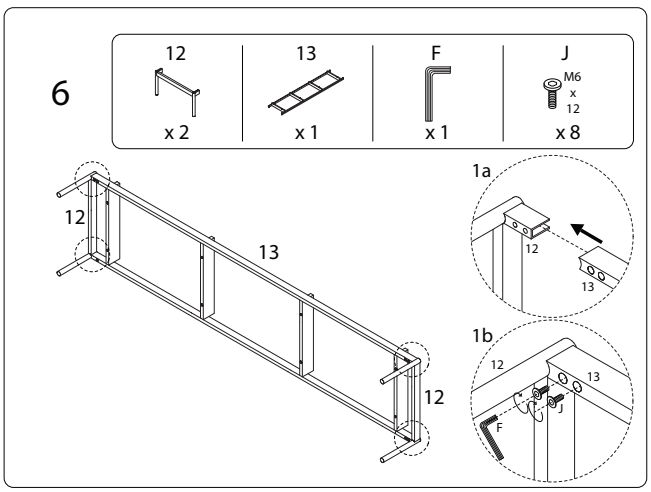
6
12
x 2
13
x 1
F
x 1
J
M6 x 12
x 8
12
13
12
1a
12
13
1b
12
13
J
F

7

F	K
x 1	M6 x 72 x 8

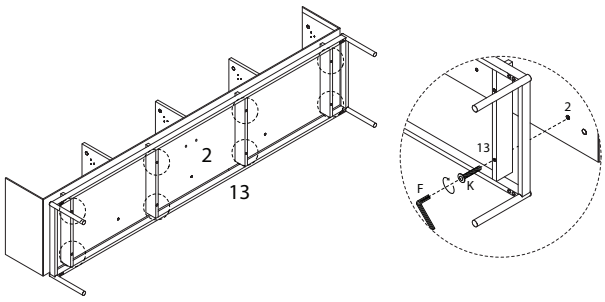

8

14	F	J	P
x 1	x 1	M6 x 12 x 2	x 1

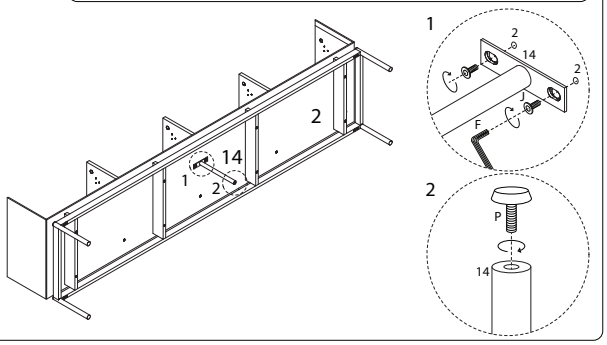

9

6	7	C
x 2	x 2	x 6

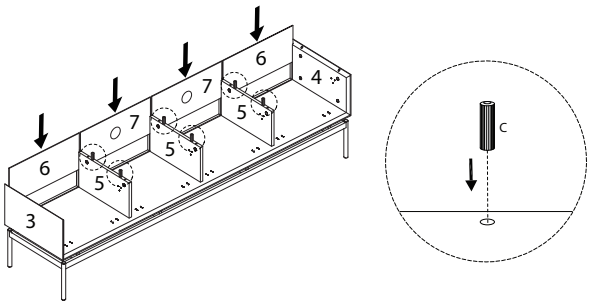

10

8	9	10	11	D	G	I
x 1	x 1	x 1	x 1	M3.5 x 14 x 20	x 8	x 4

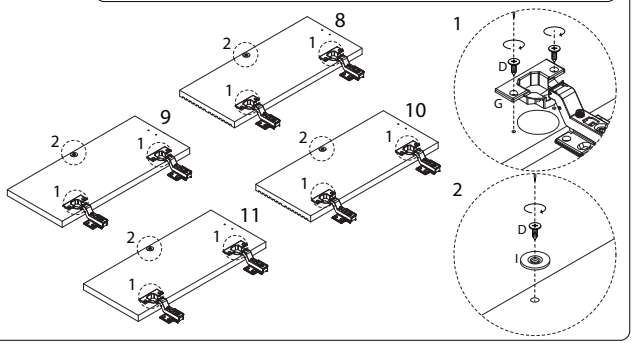

11

D
M3.5 x 14 x 32

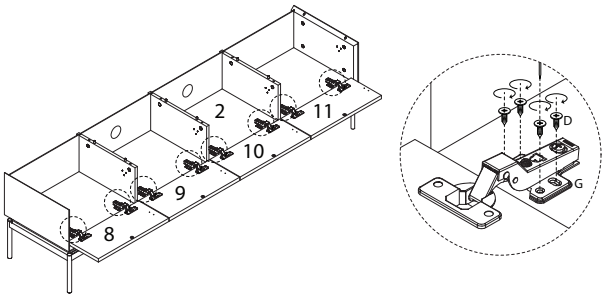

12

M	D
x 4	M3.5 x 14 x 20

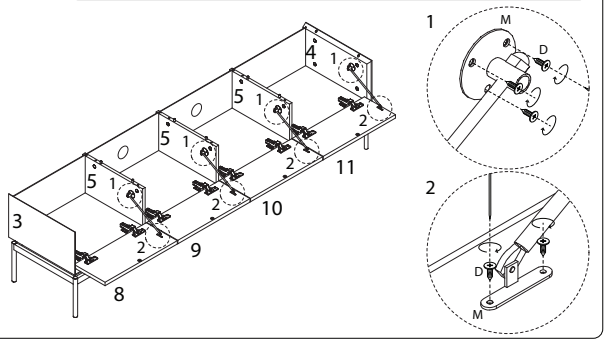

13

1	H	D
x 1	x 4	M3.5 x 14 x 8

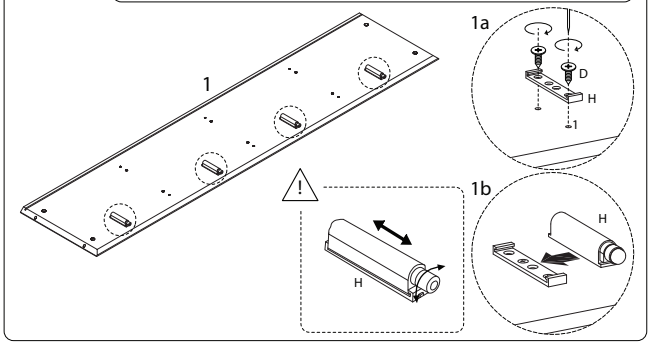

14

A
x 6

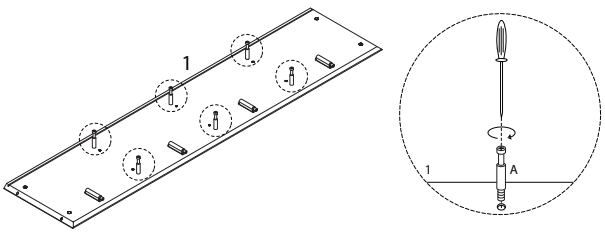

15

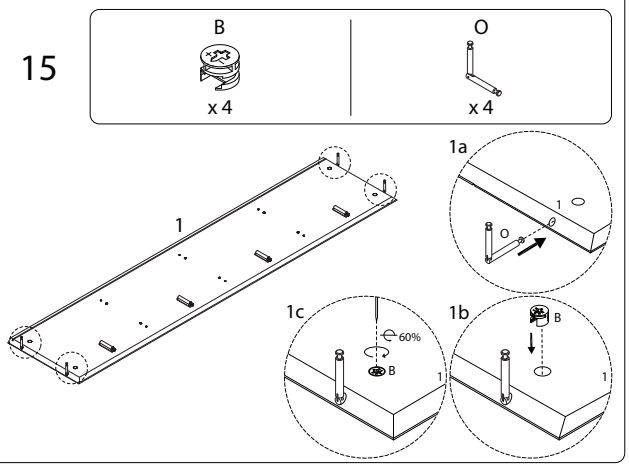
B
x 4
O
x 4
1
1a
1
O
1c
60%
B
1
1b
B
1

16

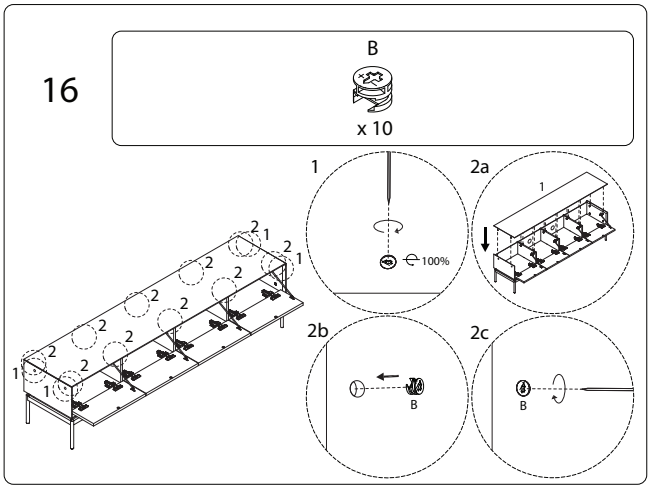
B
x 10
1
100%
2a
1
2b
B
2c
B

17

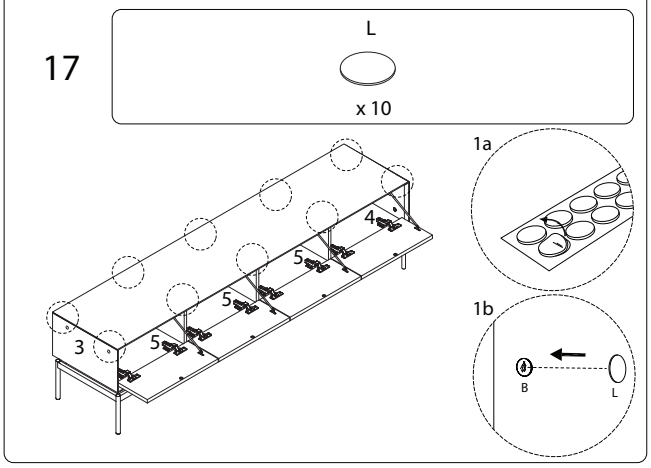
L
x 10
1a
1b
B
L

18

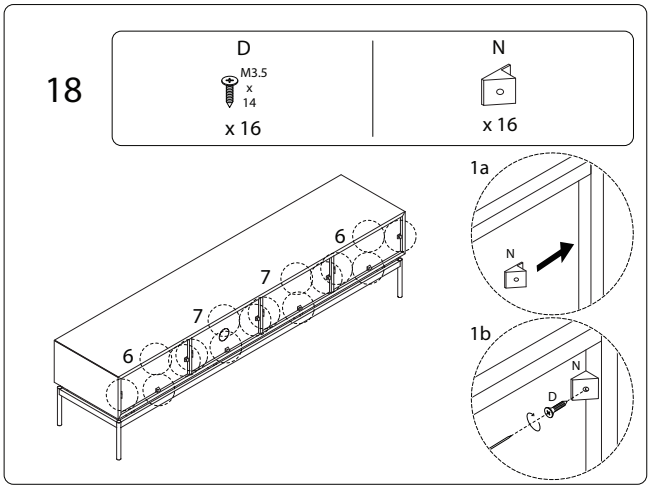
D
M3.5
x
14
x 16
N
x 16
1a
N
1b
N
D