MAUNU

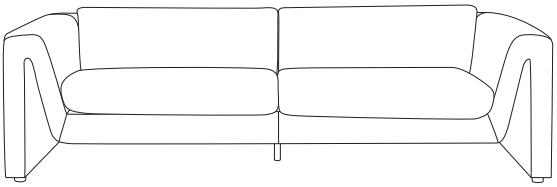

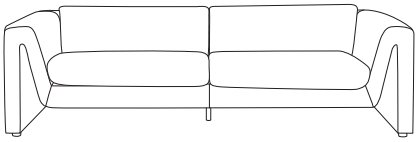

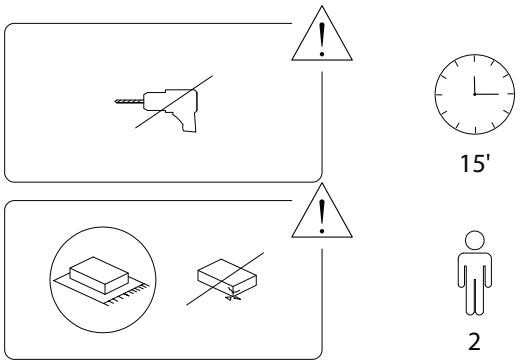

1/5

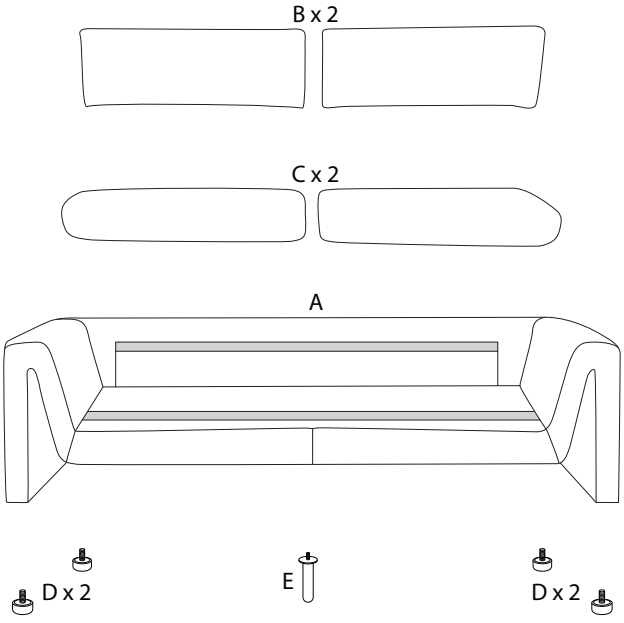

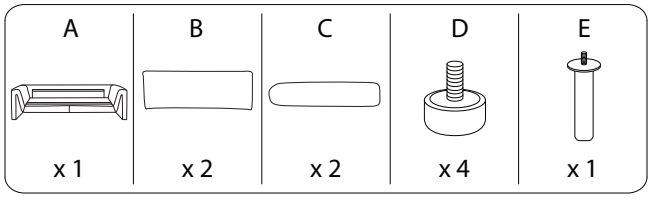

2/5

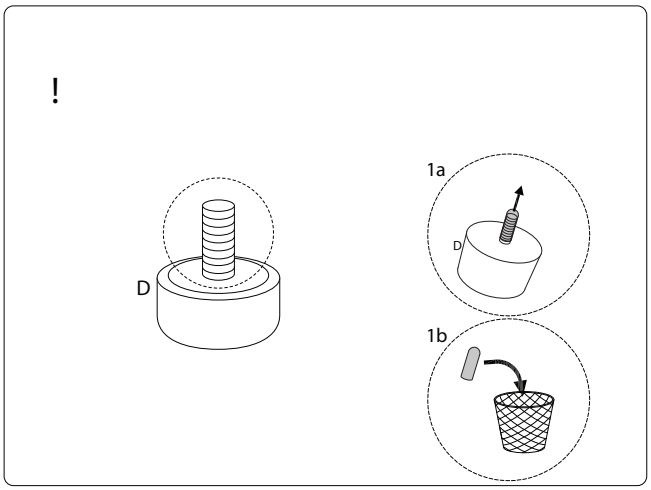

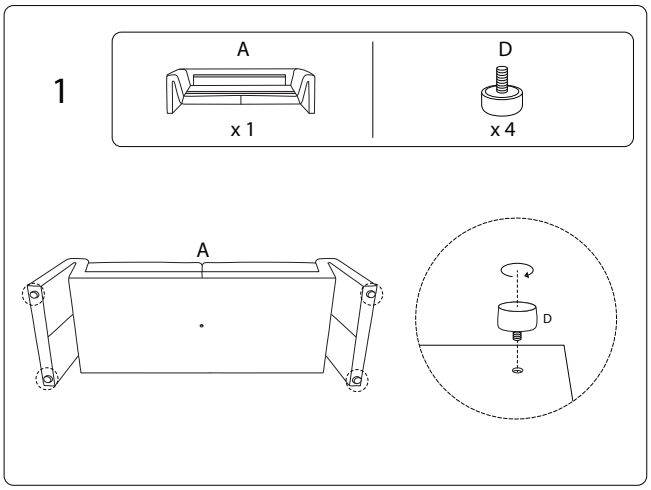

3/5

2

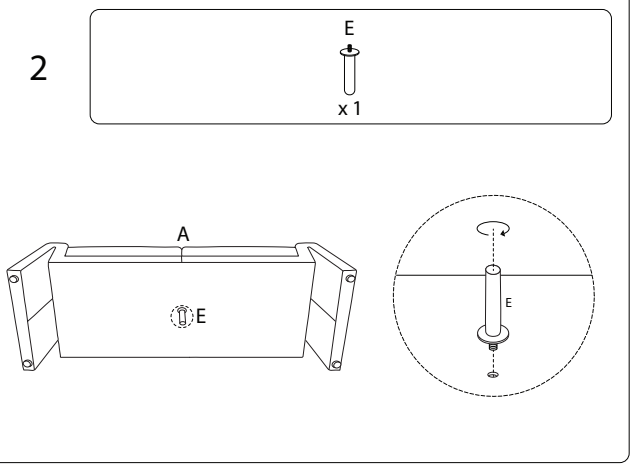

3

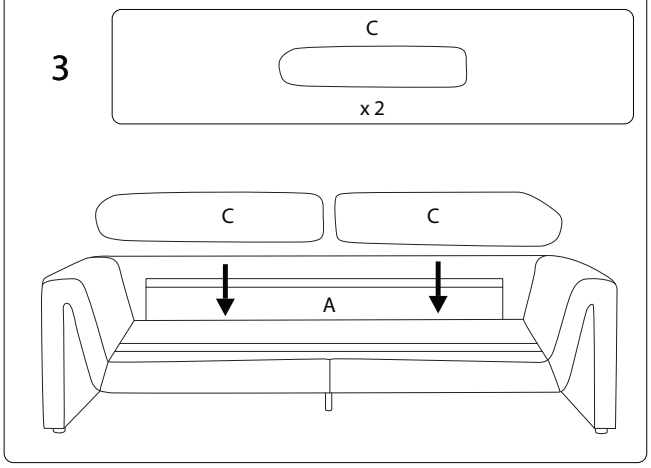

!

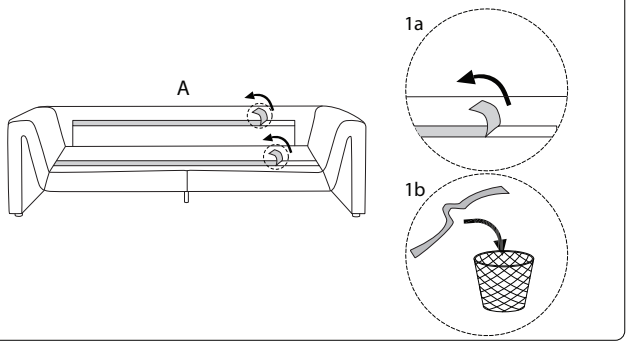

4

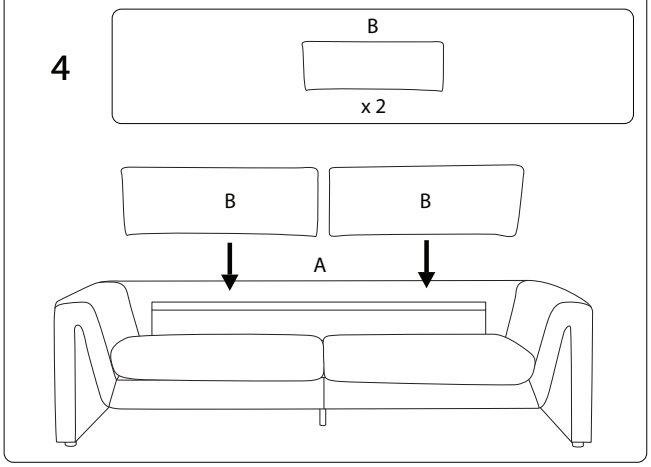

1919/MAUNU/060224/

1919/MAUNU/060224/